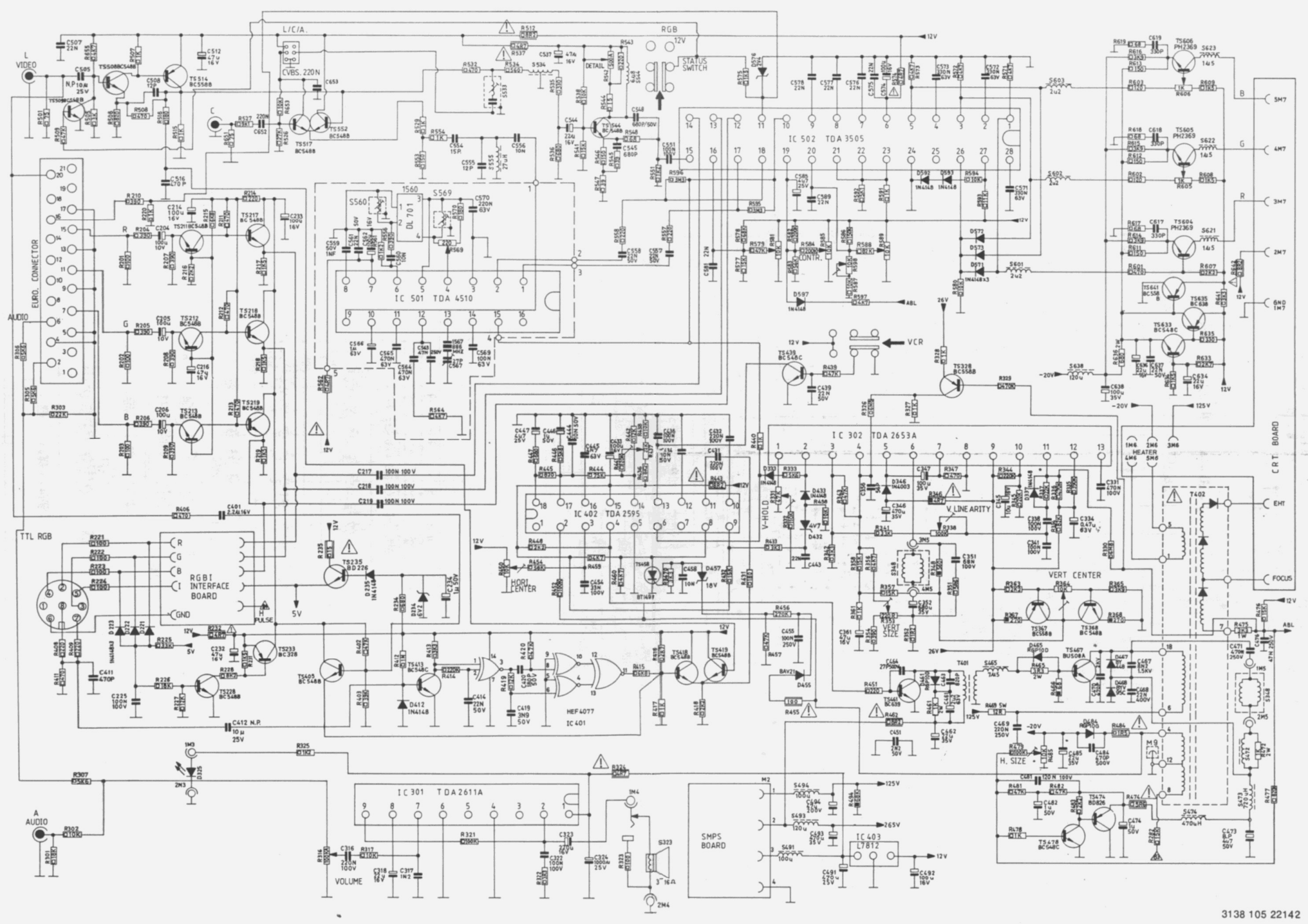

3138 105 22142

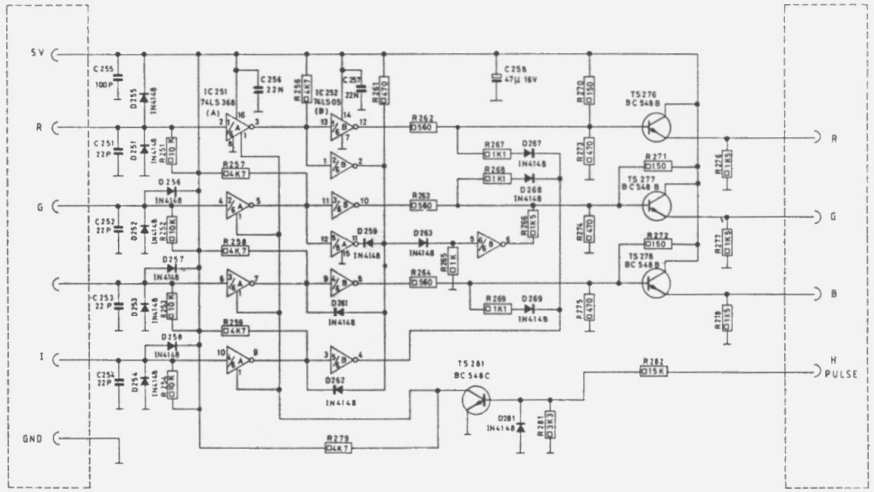
5V
R
G
I
GND
H
PULSE
IC 251
74LS 368
(A)
IC 252
74LS 05
(B)
TS 276
BC 548 B
TS 277
BC 548 B
TS 278
BC 548 B
TS 281
BC 548 C

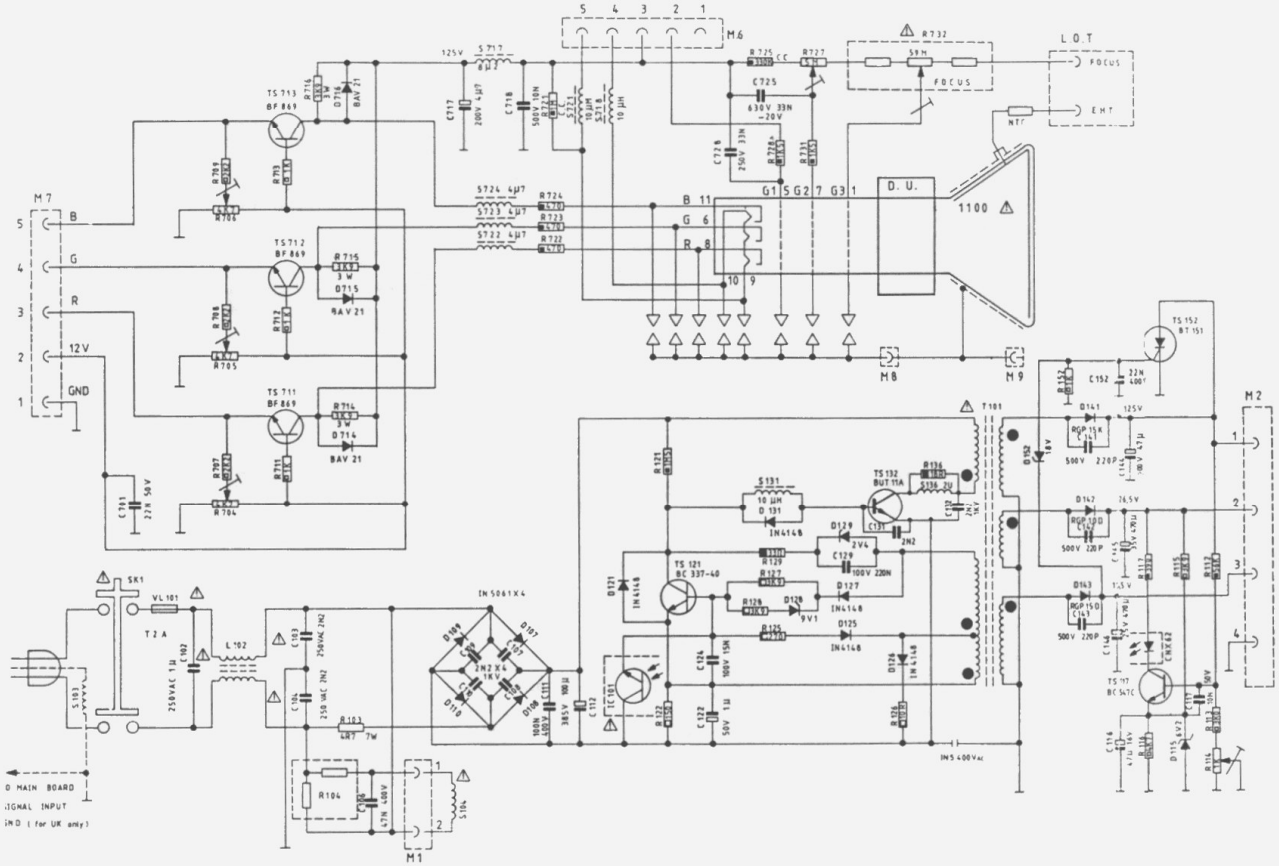
M 7
M 6
M 8
M 9
M 2
M 1
L.O.T
FOCUS
EHT
D. U.
1100
TS 711
BF 869
TS 712
BF 869
TS 713
BF 869
TS 121
BC 337-40
TS 132
BUT 11A
TS 152
BT 151
TS 97
BC 547C
IN 5061X4
IN 5400Vac
SK1
VL 101
T 2 A
L 102
T 101
S 103
S 104
D MAIN BOARD
SIGNAL INPUT
IMD (for UK only)