SYSTEM SCHEMATICS

A3000

MARCH, 1990 **PN-314677-01**

Commodore Business Machines, Inc.
1200 Wilson Drive, West Chester, Pennsylvania 19380 U.S.A.

Commodore makes no express or implied warranties with regard to the information contained herein. The information is made available solely on an as is basis, and the entire risk as to completeness, reliability, and accuracy is with the user. Commodore shall not be liable for any damages in connection with the use of the information contained herein. The listing of any available replacement part herein does not constitute in any case a recommendation, warranty or guaranty as to quality or suitability of such replacement part. Reproduction or use without express permission, of editorial or pictorial content, in any matter is prohibited.

This manual contains copyrighted and proprietary information. No part of this publication may be reproduced, stored in a retrieval system, or transmitted in any form or by any means, electronic, mechanical, photocopying, recording or otherwise, without the prior written permission of Commodore Electronics Limited.

Copyright © 1990 by Commodore Electronics Limited.
All rights reserved.

TABLE OF CONTENTS

- **SPECIFICATIONS**
- **PARTS LISTS**
- **SCHEMATICS**

A3000 FUNCTIONAL SPECIFICATION

INTRODUCTION

The A3000 is a cost reduced version of the A2500 personal computer. These cost reductions are achieved by extensive use of in house gate array technology, superior packaging and reduced power consumption. Visually, the A3000 is rendered similarly to a PS-2 computer; a low profile, small footprint case is used with a detached keyboard.

FEATURES

The objectives (features are:)

- 16 Mhz 68030 based CPU w/ 68881 optional (Optionally a 25 Mhz 68030 w/ 68882).
- 1 Meg of Chip Ram, expandable on board to 2 Meg. (32 bit access to CPU).
- 1 Meg of 32 bit wide Fast Ram, (expandable on board to 4 Meg).
- Kickstart in 32 bit ROM.
- Integral 3.5 inch Hard Disk & SCSI controller
- Facilities for 2 3.5 inch floppies.
- Real Time Clock.
- Facilities for on board de-interlacer/scan doubler.
- 4 100 pin Amiga slots, 2 of which are in line with PCAT slots, and one of which is in line with a new formfactor video slot.

The height and width of the A2000 casework has been replaced by a smaller footprint low profile case. The external floppy expansion disk connector has been replaced with the SCSI connector. The fan shall be less noisy than that on the A2000.

WHAT'S ADDED

The system now has a 68030 running with 32 bit wide RAM, and 32 bit wide ROM. An on board SCSI controller provides support for the optional internal hard disk drive, as well as a host of external peripherals such as optical disk drives, etc. 32 bit access to chip memory is provided.

CUSTOM CHIPS

The A3000 CPU will require the use of more custom integrated circuitry than any previous Commodore product. In addition to the 3 chip Amiga chipset, there are 5 new custom chips.

These include the system glue chip (FATGARY), a new expansion buss controller (FATBUSTER), a new ram controller with DMA support (RAMSEY), a new improved disk IO controller (SDMAC), and the flicker fixer gate array controller part (AMBER).

FATGARY

As the name implies, this chip is a larger version of the gary chip originally used in the A500 CPU design. Fat gary provides chip select and DASCK support for motherboard resources such as the 8520's, RTC, chipram, roms and SDMAC.

FATBUSTER

Fat Buster is a new, larger version of the A2000 chip of the same name. As before, it is responsible for expansion buss control and arbitration. However, the new buster also maps 32 bit 68030 memory cycles onto standard A2000 16 bit expansion buss cycles. Fat Buster also provides extensions to the standard A2000 16 bit buss protocol which allow full 32 bit address and data DMA to occur to and from expansion cards. Thus FATBUSTER allows us to mix and match existing 16 bit A2000 expansion cards, and a new 32 bit card format on the same expansion buss in a wholly compatible manner.

RAMSEY

RAMSEY is a dual function chip. It provides support for up to 4 megabytes of on board 32 bit wide ram, and provides address generation support for the super DMAC.

SDMAC

SDMAC is a new improved version of the 4701 series of disk & SCSI DMA controllers. SDMAC allows us to provide 32 bit Direct Disk DMA. It is felt that this will yield greatly improved system throughput for large applications, or disk intensive operating systems (read UNIX).

AMBER

Amber is the name of the flicker fixer controller gate array. This device, in conjuction with some specialized video memories, effectively provides a flicker fixer at low cost. This essential capability is to be option due to the sensitive cost of the specialized video drams required.

SYSTEM IO

The IO capabilities of the A3000 are as follows:

EXTERNAL SYSTEM IO

Serial/Parallel/Mouse/Joystick/Keyboard/Stereo Audio ports

These ports remain unchanged from their A2000 counterparts.

SCSI connector

This connector is the same as that found on the back of the 2090 series of hard disk controllers. It allows communication to a variety of devices including hard disks, optical drives and laser printers.

Video & VGA connectors

As in all Amigas, the A3000 supplies the standard 23 pin video connector. In addition, the on board flicker fixer provides a standard 15 pin VGA connector.

INTERNAL SYSTEM IO

The following connectors comprise the internal IO capabilities of the A3000.

- SCSI hard drive ribbon cable header
- 4 Amiga slots
  - 2 — PC/AMIGA bridge slots
  - 1 — Amiga slot colinear with video expansion
  - 1 — 1 Amiga only slot
- Socketed chip memory expansion good for upgrade from 1 to 2 meg of chip.
- Socketed fast RAM expansion for upgrade from 1 to 4 Meg.

MEMORY MAP

The A3000 makes use of the full 32 bit addressing capability of the MC68030. In the lower 16 Meg, (the only region addressable by the 68000), the memory map is basically unchanged from that of the A2000.

$000000-	$1FFFFF	Up to 2 Megs of Chip Memory
$200000-	$9FFFFF	Auto Config Expansion space
$A00000-	$BFFFFF	IO Space (8520s)
$C00000-	$D7FFFF	Location of A500 Magic $C00000 memory. Unused in this machine.
$D80000-	$D9FFFF	Custom chip register mirror or real time clock.
$DA0000-	$DBFFFF	Unused.
$DC0000-	$DDFFFF	Real Time Clock.
$DE0000-	$DFFFFF	Custom chip registers.
$E00000-	$E80000	Unused.
$E80000-	$E8FFFF	Autoconfig slot.
$E90000-	$EFFFFF	64k autoconfig slots.
$F00000-	$FFFFFF	Rom space.
$01000000-	$07FFFFFF	On board 32 bit ram space. This grows down from $07FFFFFF.
$08000000-	$0FFFFFFF	32 bit ram expansion space. This grows up from $08000000.
$10000000-	$EFFFFFFF	32 bit 'other' expansion space.

Commodore International Spare Parts List
SHIPPING ASSEMBLIES

Commodore part numbers are provided for reference only and do not indicate the availability of spare parts from Commodore. Industry standard parts (Resistors, Capacitors, Connectors) should be secured locally. Part number information may vary according to country, some parts may not be available in all countries.

313276-01	**A3000 SHIPPING ASSY (USA) 16 MHZ**
363327-01	BOX PACKING CPU
320408-04	BAG FLAT 650 X 650 MM
318992-01	PACKING END CAP
318993-01	PACKING SPACER
318170-01	CARD READ THIS FIRST
316840-01	LABEL UPC
313278-02	MAIN ASSY (NTSC 110V) 16MHZ
903508-15	CORD POWER
327124-02	MOUSE ASSY
313323-02	KEYBOARD A3000 (U.S.)
363312-01	MANUAL A3000 QUICK CONNECT GUIDE
380426-01	FOAM NEOPOLEN SET (USE W/KEYBD)
251006-02	BAG FLAT 580MM X 350 MM (USE W/KEYBD)
324257-01	BAG DRYING AGENT
324252-07	TAPE ADHESIVE TRANSPARENT 50MM
315929-01	SOFTWARE SUB ASSY A3000 U.S.

313276-02	**A3000 SHIPPING ASSY (CANADA) 16 MHZ**
363327-01	BOX PACKING CPU
320408-04	BAG FLAT 650 X 650 MM
318992-01	PACKING END CAP
318993-01	PACKING SPACER
318170-01	CARD READ THIS FIRST
316840-01	LABEL UPC
313278-02	MAIN ASSY (NTSC 110V) 16MHZ
903508-15	CORD POWER
327124-02	MOUSE ASSY
313323-02	KEYBOARD A3000 (U.S.)
363312-01	MANUAL A3000 QUICK CONNECT GUIDE
380426-01	FOAM NEOPOLEN SET (USE W/KEYBD)
251006-02	BAG FLAT 580MM X 350 MM (USE W/KEYBD)
324257-01	BAG DRYING AGENT
324252-07	TAPE ADHESIVE TRANSPARENT 50MM
315929-02	SOFTWARE SUB ASSY A3000 CANADA

313276-03	**A3000 SHIPPING ASSY (USA) 25 MHZ**
363327-01	BOX PACKING CPU
320408-04	BAG FLAT 650 X 650 MM
318992-01	PACKING END CAP
318993-01	PACKING SPACER
318170-01	CARD READ THIS FIRST
316840-01	LABEL UPC
313278-04	MAIN ASSY (NTSC 110V) 25MHZ
903508-15	CORD POWER
327124-02	MOUSE ASSY
313323-02	KEYBOARD A3000 (U.S.)
363312-01	MANUAL A3000 QUICK CONNECT GUIDE
380426-01	FOAM NEOPOLEN SET (USE W/KEYBD)
251006-02	BAG FLAT 580MM X 350 MM (USE W/KEYBD)
324257-01	BAG DRYING AGENT
324252-07	TAPE ADHESIVE TRANSPARENT 50MM
315929-01	SOFTWARE SUB ASSY A3000 U.S.

313276-04	**A3000 SHIPPING ASSY (CANADA) 25 MHZ**
363327-01	BOX PACKING CPU
320408-04	BAG FLAT 650 X 650 MM
318992-01	PACKING END CAP
318993-01	PACKING SPACER
318170-01	CARD READ THIS FIRST
316840-01	LABEL UPC
313278-04	MAIN ASSY (NTSC 110V) 25MHZ
903508-15	CORD POWER
327124-02	MOUSE ASSY
313323-02	KEYBOARD A3000 (U.S.)
363312-01	MANUAL A3000 QUICK CONNECT GUIDE
380426-01	FOAM NEOPOLEN SET (USE W/KEYBD)
251006-02	BAG FLAT 580MM X 350 MM (USE W/KEYBD)
324257-01	BAG DRYING AGENT
324252-07	TAPE ADHESIVE TRANSPARENT 50MM
315929-02	SOFTWARE SUB ASSY A3000 CANADA

533000-01	**A3000 SHIPPING ASSY (EUROPEAN) 16 MHZ**
363326-01	BOX PACKING CPU
320408-04	BAG FLAT 650 X 650 MM
318992-01	PACKING END CAP
324257-01	BAG DRYING AGENT
324252-07	TAPE ADHESIVE TRANSPARENT 50MM
313278-01	MAIN ASSY (PAL 220V) 16MHZ

533000-02	**A3000 SHIPPING ASSY (EUROPEAN) 25 MHZ**
363326-01	BOX PACKING CPU
320408-04	BAG FLAT 650 X 650 MM
318992-01	PACKING END CAP
324257-01	BAG DRYING AGENT
324252-07	TAPE ADHESIVE TRANSPARENT 50MM
313278-03	MAIN ASSY (PAL 220V) 25MHZ

313323-01	**KEYBOARD ASSY A3000 U.K.**
312458-01	HOUSING KEYBOARD TOP
312375-01	HOUSING KEYBOARD BOTTOM
312715-01	PCB ASSY KEYBOARD U.K.
380130-01	FOOT KEYBOARD ADJUSTABLE
380131-01	PLATE SPRING
907272-06	WASHER FLAT 4.3 MM
906883-04	SCREW PAN HEAD S.T. 2.9 X 9.5MM
906805-03	SCREW FLAT HEAD S.T. 2.9 X 9.5MM
380129-01	FOOT PLASTIC
380018-05	CABLE KEYBOARD ASSY II HITEK

313323-02	**KEYBOARD ASSY A3000 U.S.**
312458-01	HOUSING KEYBOARD TOP
312375-01	HOUSING KEYBOARD BOTTOM
312715-02	PCB ASSY KEYBOARD U.S.
380130-01	FOOT KEYBOARD ADJUSTABLE
380131-01	PLATE SPRING
907272-06	WASHER FLAT 4.3 MM
906883-04	SCREW PAN HEAD S.T. 2.9 X 9.5MM
906805-03	SCREW FLAT HEAD S.T. 2.9 X 9.5MM
380129-01	FOOT PLASTIC
380018-06	CABLE KEYBOARD ASSY II TOROID

313323-03	**KEYBOARD ASSY A3000 GERMANY**
312458-01	HOUSING KEYBOARD TOP
312375-01	HOUSING KEYBOARD BOTTOM
312715-03	PCB ASSY KEYBOARD GERMANY
380130-01	FOOT KEYBOARD ADJUSTABLE
380131-01	PLATE SPRING
907272-06	WASHER FLAT 4.3 MM
906883-04	SCREW PAN HEAD S.T. 2.9 X 9.5MM
906805-03	SCREW FLAT HEAD S.T. 2.9 X 9.5MM
380129-01	FOOT PLASTIC
380018-05	CABLE KEYBOARD ASSY II HITEK

313323-04	**KEYBOARD ASSY A3000 ITALY**
312458-01	HOUSING KEYBOARD TOP
312375-01	HOUSING KEYBOARD BOTTOM
312715-04	PCB ASSY KEYBOARD ITALY
380130-01	FOOT KEYBOARD ADJUSTABLE
380131-01	PLATE SPRING
907272-06	WASHER FLAT 4.3 MM
906883-04	SCREW PAN HEAD S.T. 2.9 X 9.5MM
906805-03	SCREW FLAT HEAD S.T. 2.9 X 9.5MM
380129-01	FOOT PLASTIC
380018-05	CABLE KEYBOARD ASSY II HITEK

313323-05	**KEYBOARD ASSY A3000 FRANCE**
312458-01	HOUSING KEYBOARD TOP
312375-01	HOUSING KEYBOARD BOTTOM
312715-05	PCB ASSY KEYBOARD FRANCE
380130-01	FOOT KEYBOARD ADJUSTABLE
380131-01	PLATE SPRING
907272-06	WASHER FLAT 4.3 MM
906883-04	SCREW PAN HEAD S.T. 2.9 X 9.5MM
906805-03	SCREW FLAT HEAD S.T. 2.9 X 9.5MM
380129-01	FOOT PLASTIC
380018-05	CABLE KEYBOARD ASSY II HITEK

Commodore International Spare Parts List
SHIPPING ASSEMBLIES *(Continued)*

313323-06	**KEYBOARD ASSY A3000 SPAIN**
312458-01	HOUSING KEYBOARD TOP
312375-01	HOUSING KEYBOARD BOTTOM
312715-06	PCB ASSY KEYBOARD SPAIN
380130-01	FOOT KEYBOARD ADJUSTABLE
380131-01	PLATE SPRING
907272-06	WASHER FLAT 4.3 MM
906883-04	SCREW PAN HEAD S.T. 2.9 X 9.5MM
906805-03	SCREW FLAT HEAD S.T. 2.9 X 9.5MM
380129-01	FOOT PLASTIC
380018-05	CABLE KEYBOARD ASSY II HITEK
313323-07	**KEYBOARD ASSY A3000 SWISS**
312458-01	HOUSING KEYBOARD TOP
312375-01	HOUSING KEYBOARD BOTTOM
312715-07	PCB ASSY KEYBOARD SWISS
380130-01	FOOT KEYBOARD ADJUSTABLE
380131-01	PLATE SPRING
907272-06	WASHER FLAT 4.3 MM
906883-04	SCREW PAN HEAD S.T. 2.9 X 9.5MM
906805-03	SCREW FLAT HEAD S.T. 2.9 X 9.5MM
380129-01	FOOT PLASTIC
380018-05	CABLE KEYBOARD ASSY II HITEK
313323-08	**KEYBOARD ASSY A3000 DENMARK**
312458-01	HOUSING KEYBOARD TOP
312375-01	HOUSING KEYBOARD BOTTOM
312715-08	PCB ASSY KEYBOARD DENMARK
380130-01	FOOT KEYBOARD ADJUSTABLE
380131-01	PLATE SPRING
907272-06	WASHER FLAT 4.3 MM
906883-04	SCREW PAN HEAD S.T. 2.9 X 9.5MM
906805-03	SCREW FLAT HEAD S.T. 2.9 X 9.5MM
380129-01	FOOT PLASTIC
380018-05	CABLE KEYBOARD ASSY II HITEK
313323-09	**KEYBOARD ASSY A3000 NORWAY**
312458-01	HOUSING KEYBOARD TOP
312375-01	HOUSING KEYBOARD BOTTOM
312715-09	PCB ASSY KEYBOARD NORWAY
380130-01	FOOT KEYBOARD ADJUSTABLE
380131-01	PLATE SPRING
907272-06	WASHER FLAT 4.3 MM
906883-04	SCREW PAN HEAD S.T. 2.9 X 9.5MM
906805-03	SCREW FLAT HEAD S.T. 2.9 X 9.5MM
380129-01	FOOT PLASTIC
380018-05	CABLE KEYBOARD ASSY II HITEK
313323-10	**KEYBOARD ASSY A3000 SWEDEN/FINLAND**
312458-01	HOUSING KEYBOARD TOP
312375-01	HOUSING KEYBOARD BOTTOM
312715-10	PCB ASSY KEYBOARD SWEDEN/FINLAND
380130-01	FOOT KEYBOARD ADJUSTABLE
380131-01	PLATE SPRING
907272-06	WASHER FLAT 4.3 MM
906883-04	SCREW PAN HEAD S.T. 2.9 X 9.5MM
906805-03	SCREW FLAT HEAD S.T. 2.9 X 9.5MM
380129-01	FOOT PLASTIC
380018-05	CABLE KEYBOARD ASSY II HITEK
313323-11	**KEYBOARD ASSY A3000 ICELANDIC**
312458-01	HOUSING KEYBOARD TOP
312375-01	HOUSING KEYBOARD BOTTOM
312715-11	PCB ASSY KEYBOARD ICELANDIC
380130-01	FOOT KEYBOARD ADJUSTABLE
380131-01	PLATE SPRING
907272-06	WASHER FLAT 4.3 MM
906883-04	SCREW PAN HEAD S.T. 2.9 X 9.5MM
906805-03	SCREW FLAT HEAD S.T. 2.9 X 9.5MM
380129-01	FOOT PLASTIC
380018-05	CABLE KEYBOARD ASSY II HITEK

533001-01	**KEYBOARD SHIPPING ASSY U.K.**
313323-01	KEYBOARD ASSY U.K.
316828-01	LABEL CARTON U.K.
251006-02	BAG FLAT 580 X 350 MM
380426-01	FOAM SET NEOPOLEN
380425-03	CONTAINER SHIPPING
324252-07	TAPE TRANSPARENT ADHESIVE 50MM
327124-02	MOUSE ASSY
363303-01	MANUAL USER A3000 U.K.
327273-02	MANUAL BASIC ENGLISH
317241-01	DISK ASSY 3.5 WORKBENCH V1.4 U.K.
317234-01	DISK ASSY 3.5 AMIGA EXTRAS V1.4 INTERNATIONAL
325249-01	CARD WARRANTY U.K.
363313-01	MANUAL WORKBENCH 1.4 ENGLISH
363312-01	MANUAL A3000 QUICK CONNECT GUIDE
903508-12	CORD POWER BSI MEDIUM BEIGE U.K. AUS
390543-01	TOOL TUNNING
533001-02	**KEYBOARD SHIPPING ASSY U.S. (NOT USED)**
313323-02	KEYBOARD ASSY U.S.
316827-01	LABEL CARTON U.S.A.
251006-02	BAG FLAT 580 X 350 MM
380426-01	FOAM SET NEOPOLEN
380425-03	CONTAINER SHIPPING
324252-07	TAPE TRANSPARENT ADHESIVE 50MM
327124-02	MOUSE ASSY
363303-01	MANUAL USER A3000 U.K.
327273-02	MANUAL BASIC ENGLISH
317954-01	DISK ASSY 3.5 WORKBENCH V1.4 U.S.
317235-01	DISK ASSY 3.5 AMIGA EXTRAS V1.4 U.S.
318896-01	CARD SOFTWARE LICENSE AGREEMENT
318903-01	CARD WARRANTY U.S.A.
312341-02	CARD DISK EXCHANGE U.S.A.
363313-01	MANUAL WORKBENCH 1.4 ENGLISH
314877-02	BOOKLET SERVICE CENTER LIST U.S.A.
380720-01	CARD REMINDER DISK & PRINTER CAUTIONS
363312-01	MANUAL A3000 QUICK CONNECT GUIDE
903508-15	CORD POWER MEDIUM BEIGE CSA/U.S.
390543-01	TOOL TUNNING
533001-03	**KEYBOARD SHIPPING ASSY GERMANY**
313323-03	KEYBOARD ASSY GERMAN
316831-01	LABEL CARTON GERMAN
251006-02	BAG FLAT 580 X 350 MM
380426-01	FOAM SET NEOPOLEN
380425-03	CONTAINER SHIPPING
324252-07	TAPE TRANSPARENT ADHESIVE 50MM
327124-02	MOUSE ASSY
363306-01	MANUAL USER A3000 GERMAN
380798-02	MANUAL BASIC GERMAN
317244-01	DISK ASSY 3.5 WORKBENCH V1.4 GERMAN
317236-01	DISK ASSY 3.5 AMIGA EXTRAS V1.4 GERMAN
318708-02	CARD PROGRAM LICENSE AGREEMENT GERMAN
320046-06	CARD WARRANTY GERMAN
363316-01	MANUAL WORKBENCH 1.4 GERMAN
363312-01	MANUAL A3000 QUICK CONNECT GUIDE
903508-11	CORD POWER VDE MEDIUM BEIGE
390543-01	TOOL TUNNING
533001-04	**KEYBOARD SHIPPING ASSY ITALY**
313323-04	KEYBOARD ASSY ITALY
316830-01	LABEL CARTON ITALY
251006-02	BAG FLAT 580 X 350 MM
380426-01	FOAM SET NEOPOLEN
380425-03	CONTAINER SHIPPING
324252-07	TAPE TRANSPARENT ADHESIVE 50MM
327124-02	MOUSE ASSY
363305-01	MANUAL USER A3000 ITALIAN
380798-04	MANUAL BASIC ITALIAN
317243-01	DISK ASSY 3.5 WORKBENCH V1.4 ITALIAN
317234-01	DISK ASSY 3.5 AMIGA EXTRAS V1.4 INTERNATIONAL
363315-01	MANUAL WORKBENCH 1.4 ITALIAN
363312-01	MANUAL A3000 QUICK CONNECT GUIDE
903508-11	CORD POWER VDE MEDIUM BEIGE
390543-01	TOOL TUNNING

Commodore International Spare Parts List
SHIPPING ASSEMBLIES *(Continued)*

533001-05	KEYBOARD SHIPPING ASSY FRANCE
313323-05	KEYBOARD ASSY FRANCE
316829-01	LABEL CARTON FRANCE
251006-02	BAG FLAT 580 X 350 MM
380426-01	FOAM SET NEOPOLEN
380425-03	CONTAINER SHIPPING
324252-07	TAPE TRANSPARENT ADHESIVE 50MM
327124-02	MOUSE ASSY
363304-01	MANUAL USER A3000 FRENCH
380798-03	MANUAL BASIC FRENCH
317242-01	DISK ASSY 3.5 WORKBENCH V1.4 FRENCH
317234-01	DISK ASSY 3.5 AMIGA EXTRAS V1.4 INTERNATIONAL
325254-01	CARD WARRANTY FRENCH
363314-01	MANUAL WORKBENCH 1.4 FRENCH
363312-01	MANUAL A3000 QUICK CONNECT GUIDE
903508-11	CORD POWER VDE MEDIUM BEIGE
390543-01	TOOL TUNNING

533001-06	KEYBOARD SHIPPING ASSY SPAIN
313323-06	KEYBOARD ASSY SPAIN
316832-01	LABEL CARTON SPAIN
251006-02	BAG FLAT 580 X 350 MM
380426-01	FOAM SET NEOPOLEN
380425-03	CONTAINER SHIPPING
324252-07	TAPE TRANSPARENT ADHESIVE 50MM
327124-02	MOUSE ASSY
363307-01	MANUAL USER A3000 SPANISH
380798-06	MANUAL BASIC SPANISH
317245-01	DISK ASSY 3.5 WORKBENCH V1.4 SPANISH
317234-01	DISK ASSY 3.5 AMIGA EXTRAS V1.4 INTERNATIONAL
363317-01	MANUAL WORKBENCH 1.4 SPANISH
363312-01	MANUAL A3000 QUICK CONNECT GUIDE
903508-11	CORD POWER VDE MEDIUM BEIGE
390543-01	TOOL TUNNING

533001-07	KEYBOARD SHIPPING ASSY NETHERLANDS
313323-07	KEYBOARD ASSY DUTCH
316836-01	LABEL CARTON DUTCH
251006-02	BAG FLAT 580 X 350 MM
380426-01	FOAM SET NEOPOLEN
380425-03	CONTAINER SHIPPING
324252-07	TAPE TRANSPARENT ADHESIVE 50MM
327124-02	MOUSE ASSY
363309-01	MANUAL USER A3000 DUTCH
380798-09	MANUAL BASIC DUTCH
317240-01	DISK ASSY 3.5 WORKBENCH V1.4 INTERNATIONAL
317234-01	DISK ASSY 3.5 AMIGA EXTRAS V1.4 INTERNATIONAL
363313-01	MANUAL WORKBENCH 1.4 ENGLISH
363312-01	MANUAL A3000 QUICK CONNECT GUIDE
903508-11	CORD POWER VDE MEDIUM BEIGE
390543-01	TOOL TUNNING

533001-08	KEYBOARD SHIPPING ASSY DENMARK
313323-08	KEYBOARD ASSY DENMARK
316835-01	LABEL CARTON DENMARK
251006-02	BAG FLAT 580 X 350 MM
380426-01	FOAM SET NEOPOLEN
380425-03	CONTAINER SHIPPING
324252-07	TAPE TRANSPARENT ADHESIVE 50MM
327124-02	MOUSE ASSY
363308-01	MANUAL USER A3000 DANISH
327273-02	MANUAL BASIC ENGLISH
317246-01	DISK ASSY 3.5 WORKBENCH V1.4 DANISH
317234-01	DISK ASSY 3.5 AMIGA EXTRAS V1.4 INTERNATIONAL
363313-01	MANUAL WORKBENCH 1.4 ENGLISH
363312-01	MANUAL A3000 QUICK CONNECT GUIDE
903508-11	CORD POWER VDE MEDIUM BEIGE
390543-01	TOOL TUNNING

533001-09	KEYBOARD SHIPPING ASSY NORWAY
313323-09	KEYBOARD ASSY NORWAY
316838-01	LABEL CARTON NORWAY
251006-02	BAG FLAT 580 X 350 MM
380426-01	FOAM SET NEOPOLEN
380425-03	CONTAINER SHIPPING
324252-07	TAPE TRANSPARENT ADHESIVE 50MM
327124-02	MOUSE ASSY
363310-01	MANUAL USER A3000 NORWEGIAN
327273-02	MANUAL BASIC ENGLISH
317247-01	DISK ASSY 3.5 WORKBENCH V1.4 NORWEGIAN
317234-01	DISK ASSY 3.5 AMIGA EXTRAS V1.4 INTERNATIONAL
363313-01	MANUAL WORKBENCH 1.4 ENGLISH
363312-01	MANUAL A3000 QUICK CONNECT GUIDE
903508-11	CORD POWER VDE MEDIUM BEIGE
390543-01	TOOL TUNNING

533001-10	KEYBOARD SHIPPING ASSY FINLAND
313323-10	KEYBOARD ASSY SWEDEN/FINLAND
316837-01	LABEL CARTON FINLAND
251006-02	BAG FLAT 580 X 350 MM
380426-01	FOAM SET NEOPOLEN
380425-03	CONTAINER SHIPPING
324252-07	TAPE TRANSPARENT ADHESIVE 50MM
327124-02	MOUSE ASSY
363303-01	MANUAL USER A3000 U.K.
327273-02	MANUAL BASIC ENGLISH
317240-01	DISK ASSY 3.5 WORKBENCH V1.4 INTERNATIONAL
317234-01	DISK ASSY 3.5 AMIGA EXTRAS V1.4 INTERNATIONAL
363313-01	MANUAL WORKBENCH 1.4 ENGLISH
363312-01	MANUAL A3000 QUICK CONNECT GUIDE
903508-11	CORD POWER VDE MEDIUM BEIGE
390543-01	TOOL TUNNING

533001-11	KEYBOARD SHIPPING ASSY SWEDEN
313323-10	KEYBOARD ASSY SWEDEN/FINLAND
316839-01	LABEL CARTON SWEDEN
251006-02	BAG FLAT 580 X 350 MM
380426-01	FOAM SET NEOPOLEN
380425-03	CONTAINER SHIPPING
324252-07	TAPE TRANSPARENT ADHESIVE 50MM
327124-02	MOUSE ASSY
363311-01	MANUAL USER A3000 SWEDISH
380798-05	MANUAL BASIC SWEDISH
317248-01	DISK ASSY 3.5 WORKBENCH V1.4 SWEDISH
317234-01	DISK ASSY 3.5 AMIGA EXTRAS V1.4 INTERNATIONAL
363313-01	MANUAL WORKBENCH 1.4 ENGLISH
363312-01	MANUAL A3000 QUICK CONNECT GUIDE
903508-11	CORD POWER VDE MEDIUM BEIGE
390543-01	TOOL TUNNING

533001-12	KEYBOARD SHIPPING ASSY ICELANDIC
313323-01	KEYBOARD ASSY U.K.
313323-11	KEYBOARD ASSY ICELANDIC
251006-02	BAG FLAT 580 X 350 MM
380426-01	FOAM SET NEOPOLEN
380425-03	CONTAINER SHIPPING
324252-07	TAPE TRANSPARENT ADHESIVE 50MM
327124-02	MOUSE ASSY
327273-02	MANUAL BASIC ENGLISH
317240-01	DISK ASSY 3.5 WORKBENCH V1.4 INTERNATIONAL
317234-01	DISK ASSY 3.5 AMIGA EXTRAS V1.4 INTERNATIONAL
363313-01	MANUAL WORKBENCH 1.4 ENGLISH
363312-01	MANUAL A3000 QUICK CONNECT GUIDE
903508-11	CORD POWER VDE MEDIUM BEIGE
390543-01	TOOL TUNNING

Commodore International Spare Parts List

SHIPPING ASSEMBLIES *(Continued)*

533001-13	KEYBOARD SHIPPING ASSY BELGIUM
313323-05	KEYBOARD ASSY FRANCE
251006-02	BAG FLAT 580 X 350 MM
380426-01	FOAM SET NEOPOLEN
380425-03	CONTAINER SHIPPING
324252-07	TAPE TRANSPARENT ADHESIVE 50MM
327124-02	MOUSE ASSY
363309-01	MANUAL USER A3000 DUTCH
380798-09	MANUAL BASIC DUTCH
317249-01	DISK ASSY 3.5 WORKBENCH V1.4 BELGIUM
317234-01	DISK ASSY 3.5 AMIGA EXTRAS V1.4 INTERNATIONAL
363314-01	MANUAL WORKBENCH 1.4 FRENCH
316833-12	LABEL CARTON BELGIUM
363312-01	MANUAL A3000 QUICK CONNECT GUIDE
903508-11	CORD POWER VDE MEDIUM BEIGE
390543-01	TOOL TUNNING

533001-14	KEYBOARD SHIPPING ASSY CANADA (NOT USED)
313323-02	KEYBOARD ASSY U.S.
251006-02	BAG FLAT 580 X 350 MM
380426-01	FOAM SET NEOPOLEN
380425-03	CONTAINER SHIPPING
324252-07	TAPE TRANSPARENT ADHESIVE 50MM
327124-02	MOUSE ASSY
363303-01	MANUAL USER A3000 U.K.
327273-02	MANUAL BASIC ENGLISH
317241-01	DISK ASSY 3.5 WORKBENCH V1.4 U.K.
317235-01	DISK ASSY 3.5 AMIGA EXTRAS V1.4 U.S.
318896-01	CARD SOFTWARE LICENSE AGREEMENT
363313-01	MANUAL WORKBENCH 1.4 ENGLISH
380720-01	CARD REMINDER DISK & PRINTER CAUTIONS
316834-01	LABEL CARTON CANADA
318556-02	CARD DISK EXCHANGE CANADA
318882-01	CARD WARRANTY CANADA
363312-01	MANUAL A3000 QUICK CONNECT GUIDE
903508-15	CORD POWER MEDIUM BEIGE CSA/U.S.
390543-01	TOOL TUNNING

533001-15	KEYBOARD SHIPPING ASSY AUSTRALIA
313323-01	KEYBOARD ASSY U.K.
251006-02	BAG FLAT 580 X 350 MM
380426-01	FOAM SET NEOPOLEN
380425-03	CONTAINER SHIPPING
324252-07	TAPE TRANSPARENT ADHESIVE 50MM
327124-02	MOUSE ASSY
363303-01	MANUAL USER A3000 U.K.
327273-02	MANUAL BASIC ENGLISH
317241-01	DISK ASSY 3.5 WORKBENCH V1.4 U.K.
317234-01	DISK ASSY 3.5 AMIGA EXTRAS V1.4 INTERNATIONAL
363313-01	MANUAL WORKBENCH 1.4 ENGLISH
318884-01	CARD WARRANTY AUSTRALIA
363312-01	MANUAL A3000 QUICK CONNECT GUIDE
903508-12	CORD POWER BSI MEDIUM BEIGE U.K. AUS
390543-01	TOOL TUNNING

315929-01	SOFTWARE SUB ASSY A3000 (U.S.)
317954-01	DISKETTE ASSY WORKBENCH 1.4 (ENG)
317235-01	DISKETTE ASSY AMIGA EXTRAS 1.4 (ENG)
318843-01	DISKETTE HOLDER
318611-01	LABEL STOP
318270-01	CARD WARRANTY (U.S.)
312341-02	CARD DISK EXCHANGE (U.S.)
363303-01	MANUAL USER A3000 (ENG)
327273-02	MANUAL BASIC (ENG)
363313-01	MANUAL WORKBENCH 1.4 (ENG)
318896-01	CARD SOFTWARE LICENSE AGREEMENT
314877-04	BOOKLET SERVICE CENTER LIST
380720-01	CARD REMINDER DISK/PRINTER CAUTIONS
318757-16	SHRINK WRAP
317201-01	DISKETTE ASSY A3000 HD
390543-01	TOOL TUNNING

315929-02	SOFTWARE SUB ASSY A3000 (CAN.)
317954-01	DISKETTE ASSY WORKBENCH 1.4 (ENG)
317235-01	DISKETTE ASSY AMIGA EXTRAS 1.4 (ENG)
318843-01	DISKETTE HOLDER
318611-01	LABEL STOP
318882-01	CARD WARRANTY (CAN.)
318556-02	CARD DISK EXCHANGE (CAN.)
363303-01	MANUAL USER A3000 (ENG)
327273-02	MANUAL BASIC (ENG)
363313-01	MANUAL WORKBENCH 1.4 (ENG)
318896-01	CARD SOFTWARE LICENSE AGREEMENT
380720-01	CARD REMINDER DISK/PRINTER CAUTIONS
318757-16	SHRINK WRAP
317201-01	DISKETTE ASSY A3000 HD
390543-01	TOOL TUNNING

Commodore International Spare Parts List
MAJOR ASSEMBLIES

Commodore part numbers are provided for reference only and do not indicate the availability of spare parts from Commodore. Industry standard parts (Resistors, Capacitors, Connectors) should be secured locally. Part number information may vary according to country, some parts may not be available in all countries.

MAIN ASSY	
313278-01	MAIN ASSY PAL 220V 16MHZ
313278-02	MAIN ASSY NTSC 110V 16MHZ
313278-03	MAIN ASSY PAL 220V 16MHZ
313278-04	MAIN ASSY NTSC 110V 25MHZ
313281-01	BASE ASSY PAL 16 MHZ
313281-02	BASE ASSY NTSC 16 MHZ
313281-03	BASE ASSY PAL 25 MHZ
313281-04	BASE ASSY NTSC 25 MHZ
313319-01	DRIVE ASSY HARD (ADD CABLE CONNECTIONS)
313318-01	DRIVE ASSY FLOPPY (ADD CABLE CONNECTIONS)
313284-01	BRACKET MOUNTING 3.5 DISK DRIVE
313250-01	CARD EXPANSION PCB ASSY
313299-01	SUPPORT CONNECTOR BOARD
318236-01	INSULATION SHEET BACK PLANE
313298-01	ROD CONNECTING
313297-01	BUTTON POWER
313301-01	COVER ASSY
325542-02	SCREW MACH.,W/EXT.TOOTH 4 X 0.7 X 6.0 LG

BASE ASSY	
313281-01	BASE ASSY PAL 16 MHZ
313281-02	BASE ASSY NTSC 16MHZ
313281-03	BASE ASSY PAL 25 MHZ
313281-04	BASE ASSY NTSC 25 MHZ
313283-01	MAIN CHASSIS BASE
313293-01	BRACKET OPTION CARD
251118-01	GUIDE PCB
906803-05	SCREW FLAT HEAD M3 X 0.5 X 4.0 LG
325542-02	SCREW MACH W/EXT TOOTH M4 X 0.7 X 6.0 LG
906800-05	SCREW MACH M3 X 0.5 X 6.0 LG
390251-02	STANDOFF D CONN
380128-01	FOOT
313294-01	BRACKET MOUSE & KEYBOARD PCB
313303-01	LED HOLDER ASSY
313310-01	PCB ASSY PAL 16 MHZ
313310-02	PCB ASSY NTSC 16 MHZ
313310-03	PCB ASSY PAL 25 MHZ
313310-04	PCB ASSY NTSC 25 MHZ
318233-01	INSULATION SHEET
390251-04	STAND OFFS HEX M/F 5 MM
316854-01	LABEL FCC ID
316791-01	LABEL BACK PANEL
311829-02	CABLE SCSI DRIVE
380742-03	CABLE FLOPPY DRIVE
380120-01	CARD PANEL EXTENSION
380739-01	CARD PANEL EXPANSION
313277-01	CARD PANEL EXTENSION - VIDEO ADAPTER
390329-01	SCREW MACH W/EXT TOOTH M3.5 X 0.6 X 5.0 LG
313285-01	BRACKET ASSY MOUNTING 240 V
313285-02	BRACKET ASSY MOUNTING 120 V
390662-	STANDOFF HEX M/F

MOUNTING BRACKET ASSY - A3000	
313285-01	BRACKET ASSY MOUNTING 240 VOLT
313285-02	BRACKET ASSY MOUNTING 120 VOLT
313292-01	BRACKET DRIVE & POWER SUPPLY MOUNTING
906800-05	SCREW MACH M3 X 0.5 X 6.0 LG
390500-01	POWER SUPPLY A3000 240 VOLT
390500-02	POWER SUPPLY A3000 120 VOLT

LED HOLDER ASSEMBLY	
313303-01	LED HOLDER ASSY
313556-01	LED 2.0MM X 10.0MM GREEN LED
313568-01	LED 2.0MM X 10.0MM YELLOW LED
313316-01	LED PCB
903351-05	CONNECTOR HOUSING 5 PINS
903353-01	CONNECTOR PINS
903756-02	LEAD WIRE AWG 24 RED L = 120.0MM
903756-10	LEAD WIRE AWG 24 BLACK L = 120.0MM

COVER ASSY- A3000	
313301-01	COVER ASSY
313279-01	COVER TOP
313280-01	BEZEL FRONT
906884-03	SCREW SELF TAPPING M4 X 10.0 LG
313296-01	COVER FLOPPY DRIVE HOLE
310317-03	LENS FLOPPY LED

3.5 HARD DISK DRIVE CABLE ASSY	
311829-01	CABLE ASSY 3.5 HARD DISK DRIVE
311829-02	CABLE ASSY 3.5 HARD DISK DRIVE
903468-07	CONNECTOR SOCKET 50 POS
903134-11	CABLE FLAT 50 POS X 575.0 ± 5.0 MM LG

DRIVE CABLE ASSY II A3000	
380742-01	CABLE ASSY DRIVE II AMIGA/MATSUSHITA JU363-282/CHINON F354
380742-02	CABLE ASSY DRIVE II AMIGA/MATSUSHITA JU253-02T/CHINON FB354
903135-10	CABLE FLAT 34 POS L = 570MM
903468-05	CONN DUAL ROW 34P
380328-01	PLUG KEYING

HARD DRIVE SUB ASSY	
313319-01	DRIVE HARD ASSY (SUBASSEMBLY)
313440-01	DRIVE ASSY HARD DISK 40 MB SCSI (QUANTUM PRODRIVE 40S)
906610-01	SCREW MACH #6 - 32 X ¼
313314-01	BRACKET MOUNTING 3.5 HDD

FLOPPY DRIVE SUB ASSY	
313318-01	DRIVE ASSY, FLOPPY (SUBASSEMBLY)
313315-01	DRIVE 3.5 FLOPPY DISK
313284-01	BRACKET MOUNTING 3.5 DISK DRIVE
325541-03	SCREW MACH W/EXT TOOTH M3 X 0.5 X 8.0 LG

Commodore International Spare Parts List
PCB Components
PCB Assembly #313310

Commodore part numbers are provided for reference only and do not indicate the availability of spare parts from Commodore. Industry standard parts (Resistors, Capacitors, Connectors) should be secured locally. Part number information may vary according to country, some parts may not be available in all countries.

IC COMPONENTS		
901882-01	1488	U304
901883-01	1489	U305
318099-01	414256 100 NS	U850-U881,U274(U263-U266,U271-U274,U858-U881) NOT INSERTED
901522-30	7407	U713,U801
390420-01	74ALS163	U476
390110-01	74F04	U204,U711
390203-01	74F08	U303,U710
390108-01	74F373	U251
390089-01	74F245	U702,U708,U709,U715,U716,U257,U258,U891-U894
390077-01	74F32	U712
390281-01	74F646	U253-U256,U703-U707
390081-01	74F74	U106
310001-01	74HC14	U477
318828-01	74HCT244	U451-U452
901521-03	74LS08	U355
901521-11	74LS157	U401
901521-63	74LS174	U195,U354
390198-01	74F86	U252
901521-01	74LS00	U353
901521-06	74LS74A	U201,U351,U480
318069-03	8372 FAT AGNUS 2 MEG	U205
318029-02	8520	U300,U350
390538-01	AMBER	U478
390433-01	8373 ECS DENISE	U450
390537-01	DPMC	U802
390539-01	FAT BUSTER	U700
390540-01	FAT GARY 4141F008A	U110
390530-01	MSM 514221RS-6	U470-U472
390086-01	LF347	U402
390399-03	MC68030 16 MHZ QFP	U100
390277-03	MC68881 16 MHZ PLCC	U101
390339-04	MC68030 25 MHZ QFP	U100
390434-02	MC68882 25 MHZ PLCC	U101
390531-01	NE564	U481
252127-01	PAULA	U400
390532-01	UPD 42101C-2	U473-U475,U479
390206-01	WD33C93	U800
328156-02	PST518	U112
390541-01	RAM CONTROLLER	U890
390525-01	RP5C01	U190
390630-01	ROM V1.4 32 BIT HIGH WORD	U181
390629-01	ROM V1.4 32 BIT LOW WORD	U180
390555-01	DELAY LINE 25 NS	U102
390526-01	PAL PROG 16L8D	U202
390527-01	PAL PROG 16L8D	U203
390528-01	PAL PROG 16R4A	U701
390529-01	PAL PROG 16L8D	U714

OSCILLATORS		
252344-01	28.375 MHZ (PAL)	U111
325566-14	28.6363 MHZ (NTSC)	U111
325566-24	32 MHZ	U104
325566-27	50 MHZ	U104
	OSC	U103 UNSTUFFED

RESISTOR PACKS		
326149-01	22 OHM 4 X 8	RP700,RP890,RP891
326149-04	47 OHM 4.X 8	RP252-RP254,RP451,RP452
326149-06	63 OHM 4 X 8	RP401
902410-11	470 OHM 9 X 10	RP256
902441-22	1K OHM 5 X 6	RP600,RP601,RP702
902410-08	4.7K OHM 9 X 10	RP400
390227-03	22 OHM 5 X 10	RP892,RP893
902410-06	3.3K OHM 5 X 10	RP350,RP800,RP801
390227-06	47 OHM 5 X 10	RP201,RP251,RP255

RESISTOR PACKS *(Continued)*		
902410-10	RPK 1K OHM 9 X 10	RP100-RP110,RP351,RP703
902441-31	RPK 4.7K OHM 5 X 6	RP453-RP455
902422-22	1K OHM 7 X 8	RP609,RP610,RP180
902441-17	470 OHM 5 X 6	RP701
380388-04	220/330 10 PIN	RP802,RP804
380388-01	220/330 6 PIN	RP803

RESISTORS 5% @ ¼ WATT, CARBON FILM, UNLESS OTHERWISE SPECIFIED		
901550-118	1 OHM	R400,R478,R479
901550-17	1.2K OHM	R401,R402
901550-64	10 OHM	R403,R404,R484
901550-20	10K OHM	R191,R305,R306,R405,R406,R408,R431,R432,R441,R442,R451,R452,R454
901550-137	91 OHM	R489
901550-01	1K OHM	R302,R433,R443,R482,R483,R487,R803,R805
901550-23	2.7K OHM	R407
901550-112	200 OHM	R301
901550-02	3.3K OHM	R110,R112
901550-105	33 OHM	R472,R473,R475-R477,R896
901550-108	360 OHM	R430,R440
901550-57	390 OHM	R434,R444
901550-19	4.7K OHM	R203
901550-56	47 OHM	R202,R204,R895
901550-58	470 OHM	R190,R192,R699
901550-82	470K OHM	R435,R445
901550-131	56 OHM	R300
901550-94	68 OHM	R307
901550-114	9.1K OHM	R480
901550-63	22 OHM	R100-R101,R106,R109,R450,R809
901550-07	100K OHM	R193
901600-36	1 OHM ½W 5% CARBON	R420
901600-15	47 OHM ½W 5% CARBON	R353
	UNSTUFFED RESISTOR	R409

CAPACITORS		
900462-20	20 PF AXIAL	C192
900462-29	47 PF AXIAL	C458
900462-31	56 PF AXIAL	C193
900462-37	100 PF NPO AXIAL	C420-C422,C459,C491,C496,C498
900463-08	220 PF AXIAL	C108,C109
900463-23	3900 PF AXIAL	C432,C442
900463-26	6800 PF AXIAL	C431,C441
900463-28	.01 UF AXIAL	C103,C104,C161,C170,C172,C174,C176,C177,C402
900463-36	.047 UF AXIAL	C411-C414
900462-27	39 PF AXIAL	C497
390082-01	.1 UF AXIAL MLC	C102,C106,C111,C191,C195,C201-C205,C251-C258,C300,C305,C350-C355,C362,C400,C401,C409,C410,C415,C434,C444,C451-C452,C470-C482,C484-C486,C489,C490,C494,C495
390082-05	.22 UF AXIAL MLC	C100,C101,C110,C180-C183,C403,C405,C406,C450,C455-C457,C700-C716
390082-04	.33 UF AXIAL MLC	C259-C274,C800,C801,C850-C873,C890-C894
900402-13	1.0 UF RADIAL TANT	C487,C488
390101-05	4.7 UF RADIAL ELECTROLYTIC	C190,C404

Commodore International Spare Parts List
PCB Components *(Continued)*
PCB Assembly #313310

CAPACITORS *(Continued)*		
900402-01	10 UF RADIAL TANT	C483
390101-04	22 UF RADIAL ELECTROLYTIC	C105,C107,C113,C317, C318,C433,C443
390101-01	47 UF RADIAL ELECTROLYTIC	C112,C162-C169,C171, C173,C175,C407,C408, C899
390101-02	100 UF RADIAL ELECTROLYTIC	C178
390101-03	470 UF RADIAL ELECTROLYTIC	C160,C416,C423,C454, C460,C492,C493
	UNSTUFFED RESERVED CAPACITORS	C307,C308,C430,C440
CONNECTORS		
252166-03	KEYBOARD CONNECTORS	CN420
390557-01	200 PIN RECEPTACLE	CN606
903345-17	34 PIN DIL	CN351
903345-25	50 PIN	CN802
903374-05	5 PIN SIL RA	CN302
903446-06	CONN 100	CN600
252122-01	RCA JACK WHITE	CN402
390334-01	DB15	CN480
390242-03	D-SUB 23P MALE PCB	CN450
390242-05	D SUB 25P MALE PCB	CN300
390242-01	D SUB 9P MALE PCB	CN400,CN401
903446-05	85P EDGE DIL86	CN451
390241-05	DUAL DB25 FEMALE DP25S	CN350,CN801
390625-01	POW15	CN160
252122-02	RCA JACK RED	CN403
327033-04	D SUB 23 PIN FEMALE PCB	CN352
MISCELLANEOUS		
380393-01	BATTERY NICAD 3.6V 60 MAH	BT190
390536-01	SWITCH, S.P.S.T. TOGGLE RA	SW480
900750-01	DIODE 1N4001	D192,D193
900850-01	DIODE 1N4148	D190,D191,D300,D800
251842-02	EMI FILTERS 3 PIN	EM1300-EM1309, EM1350-EM1364, EM1430-EM1436, EM1440-EM1442, EM1444-EM1446, EM1450,EM1451, EM1453-EM1456, EM1458,EM1459, EM1490-EM1494

MISCELLANEOUS *(Continued)*		
390280-01	FUSE 3A	F300,F350,F351,F400, F450
903025-01	FERRITE BEAD	FB110,FB111,FB400, FB401,FB420-FB422, FB480-FB487
903326-03	HEADER SIL .100	J101,J102,J104,J151, J152,J180,J200,J350-J352,J481-J483,J800, J851,J853
903326-05	HEADER SIL .100 1 X 5	J852
903326-04	HEADER SIL .100 1 X 4	J100,J103
390229-01	IC VIDEO HYBRID	HY450,HY480
902410-11	RESISTOR PACK, 470 OHM 9 X 10	RP256
902442-06	RESISTOR PACK, 68 OHM 4 X 8	RP401
904150-06	SOCKET 40 PIN DIP	U180,U181,U300,U350, U800
251313-01	SOCKET 48 PIN DIP	U400,U450
390185-01	SOCKET 84 PIN PIN PLCC	U890,U110,U205,U700, U802
390185-02	SOCKET 68 PIN PLCC	U478
904150-01	SOCKET 14 PIN DIP .300	U103
904150-08	SOCKET 20 PIN DIP .300	U202,U203,U267-U274, U701,U714,U850-U881
390060-01	SOCKET 24 PIN DIP .300	U473,U474,U475,U479
904150-06	SOCKET 40 PIN DIP	U180,U181,U300,U350, U800
904150-02	SOCKET 16 PIN DIP .300	U470,U471,U472
390043-01	SHUNT PACK DIP	J100-J104,J151,J152, J180,J181,J200,J350-J352,J481-J483,J800, J801,J851-J853
251029-07	CAP VAR 3-11 PF	VC470
251029-06	CAP VAR 22-47 PF	VC190
390546-01	RES VAR 1K 15 TURN	VR470
900560-01	CRYSTAL 32768HZ	Y190
390192-01	TRANSISTOR 2N3904	Q300
902707-01	TRANSISTOR 2N3906	Q400
390252-01	TRANSISTOR MPF102	Q430,Q440

Commodore International Spare Parts List
A3000 Daughter Board
PCB Assembly #313250-01

IC COMPONENTS		
380227-01	74HCT32	U600
RESISTOR PACKS		
902441-22	SIP 1K 5 RES 6 PIN	RP611
902410-10	SIP 1K 9 RES 10 PIN	RP752-RP756
380388-01	SIP 220/330 4 RES 6 PIN	RP608
380388-04	220/330 8 RES 10 PIN	RP602-RP607
902410-08	SIP 4.7K 9 RES 10 PIN	RP751
RESISTORS, ¼ WATT		
901550-58	470 OHM	R601
901550-01	1K OHM	R600

CAPACITORS		
390082-01	CER AXL .1 UF	C606
390082-05	CER AXL .22 UF	C752-C754,C849
900014-02	CER RAD 1000 PF	C756-C799
900101-47	ELEC AXL 220 UF 16V	C600-C603
390101-04	ELEC RAD 22 UF 16V	C751
900462-29	CER AXL 47 PF 50V	C458
CONNECTORS		
903446-06	CARD EDGE 100 PIN	CN600-CN603
903446-04	CARD EDGE 36 PIN	CN451,CN452,CN754, CN755
903446-02	CARD EDGE 62 PIN	CN751,CN752

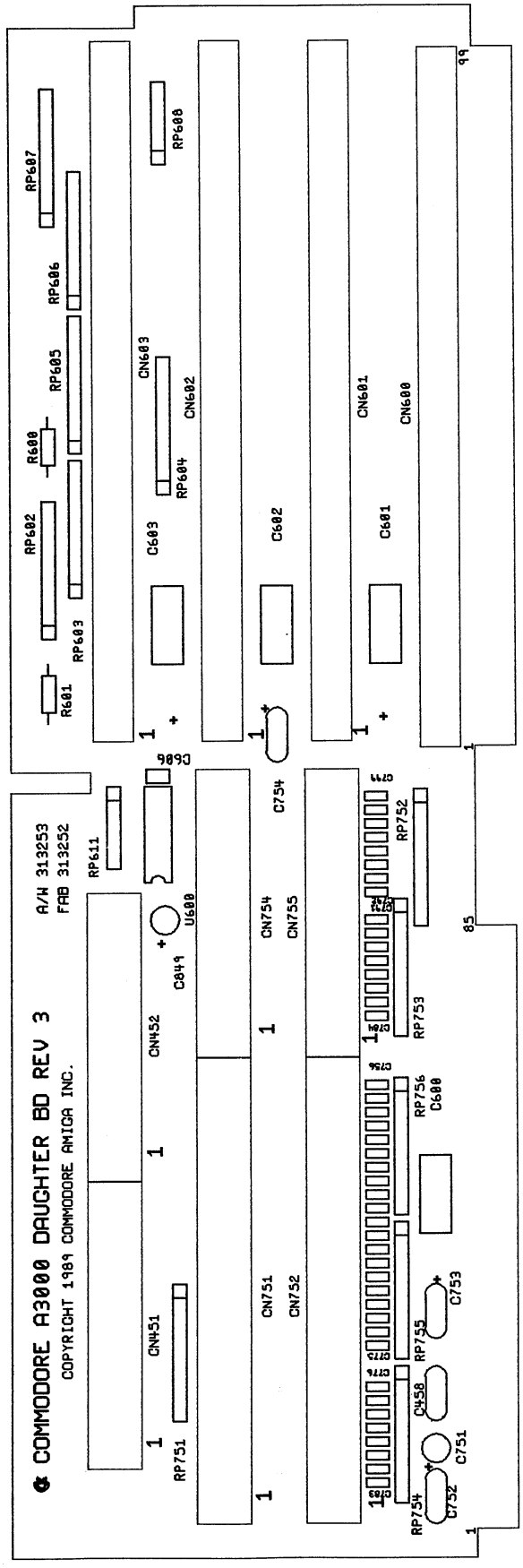

A3000 DAUGHTER BOARD, REV. 3

JUMPER SETTINGS

JUMPER	PINS	313311 -01	313311 -02	313311 -03	313311 -04	FUNCTION
J100	4	2-3	2-3	1-2	1-2	Quadrature Clock Phasing
J101	3	2-3	2-3	2-3	2-3	FPU Clock Source
J102	3	2-3	2-3	2-3	2-3	System Clock Source
J103	4	3-4	3-4	3-4	3-4	FPU CS/BERR
J104	3	1-2	1-2	1-2	1-2	CPU Clock Source
J200	3	1-2	2-3	1-2	2-3	NTSC/PAL Select
J151	3	2-3	2-3	1-2	1-2	Rom Timing
J152	3	2-3	2-3	1-2	1-2	Rom Timing
J180	3	2-3	2-3	2-3	2-3	A2000 ROM Compatibility Jumpers
J181	3	2-3	2-3	2-3	2-3	A2000 ROM Compatibility Jumpers
J350	3	1-2	1-2	1-2	1-2	Tick Clock Source
J351	3	2-3	2-3	2-3	2-3	Disable DF1: (1-2 to enable)
J352	3	2-3	2-3	2-3	2-3	Light Pen Source
J481	3	2-3	2-3	2-3	2-3	VDE Scan Double Only Jumper
J482	3	1-2	1-2	1-2	1-2	VDE PLL Loop Adjust
J483	3	---	---	---	---	VDE Factory Test Points
J800	3	1-2	1-2	1-2	1-2	WD33C93 Speed
J851	3	1-2	1-2	2-3	2-3	RAM Controller Speed Jumper
J852	5	4-5	4-5	4-5	4-5	-012A Ramsey only (See Notes)
J853	3	2-3	2-3	2-3	2-3	-012A Ramsey only (See Notes)

Notes:

J150,J151: Rom Timing

The rom timing circuit provides four different speed settings to match the output enable, and access timing of the system roms.

To set the jumpers, determine the output enable time, and access times for the roms you wish to use. The rom must have lower values than for the setting you select.

System standard roms have Toe = 110 ns, and Tacc = 250 ns.

CLK	J151	J150	Toe (min)	Tacc (min)
16 Mhz	2-3	2-3	157 ns	250 ns
16 Mhz	2-3	1-2	220 ns	312 ns
16 Mhz	1-2	2-3	282 ns	375 ns
16 Mhz	1-2	1-2	345 ns	437 ns
25 Mhz	2-3	2-3	90 ns	160 ns
25 Mhz	2-3	1-2	130 ns	200 ns
25 Mhz	1-2	2-3	170 ns	240 ns
25 Mhz	1-2	1-2	210 ns	280 ns

J180,J181: Rom Compatibility Jumpers

	J180	J181
A2000/A500 ROMS:	1-2	1-2
A3000 ROMS:	2-3	2-3

J851-J853: Ram Controller Compatibility Settings

	J852	J853
-012A Ramsey w/ 256Kx4 rams	4-5	2-3
Later Ramseys w/ 256Kx4 rams	2-3	1-2
Later Ramseys w/ 1Mx4 rams	1-2	1-2

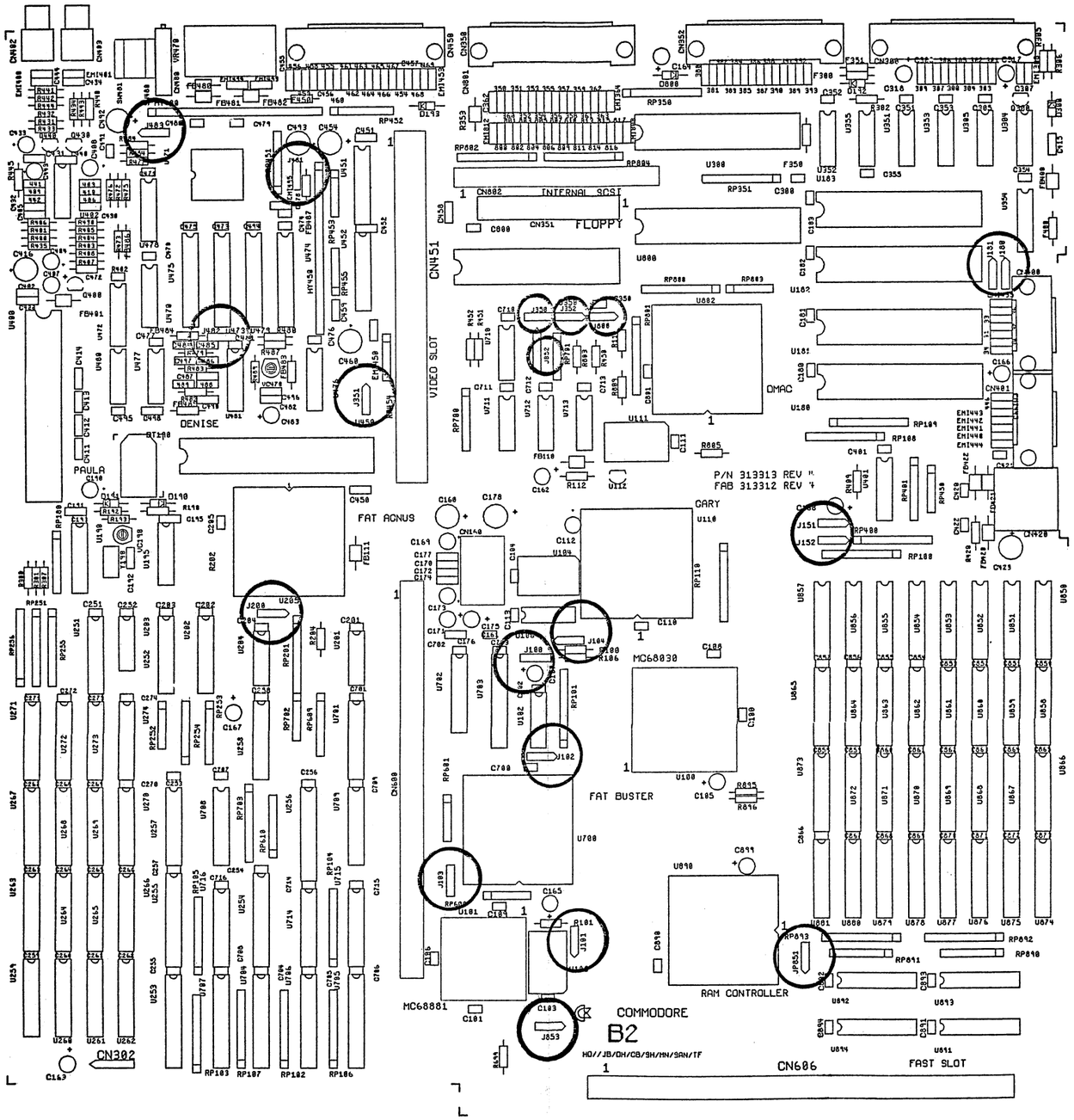

PCB BOARD LAYOUT #313311, REV. A

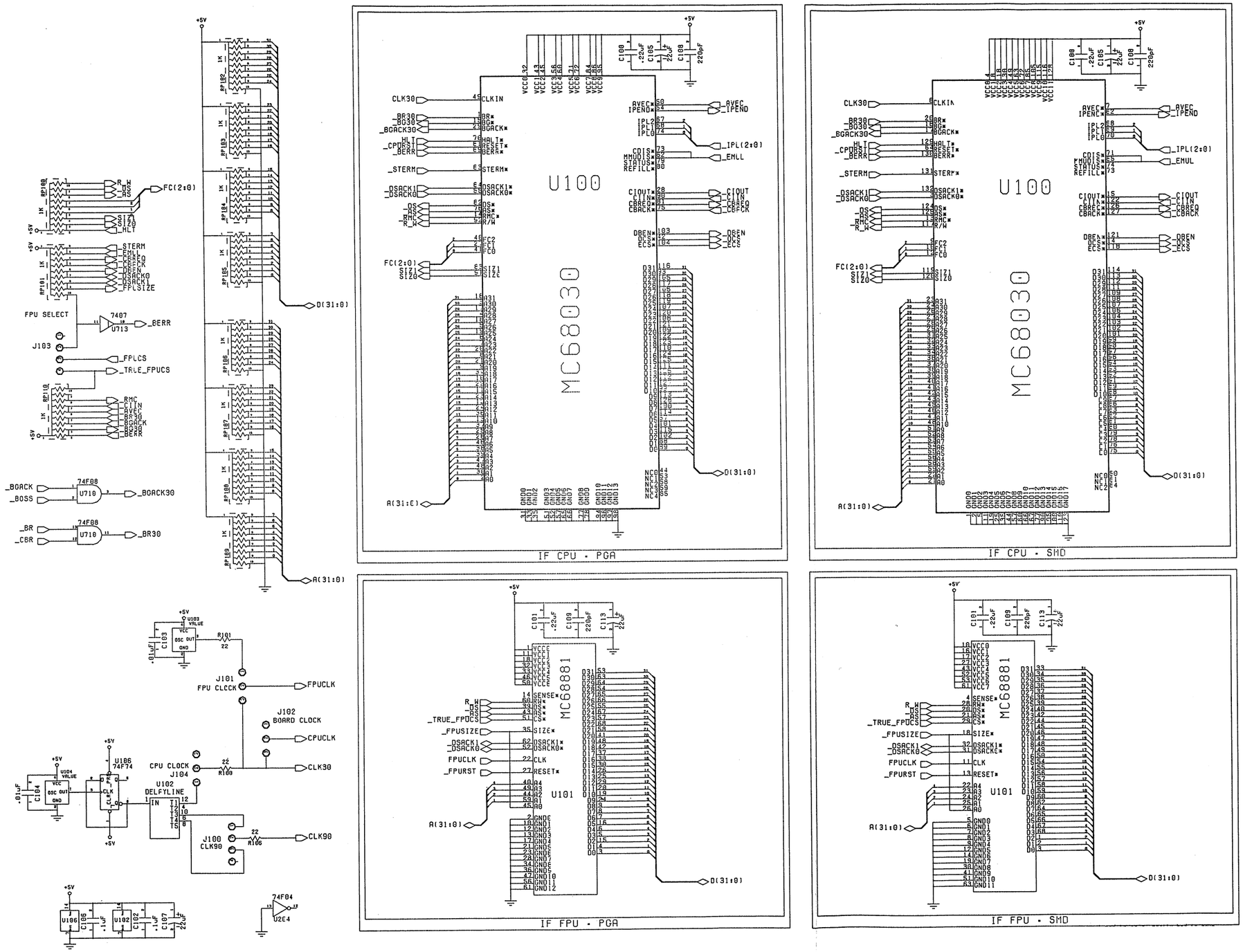
FPU SELECT
J103
7407
U713
_BERR
_FPUCS
_TRUE_FPUCS
FC(2:0)
D(31:0)
A(31:0)
_BGACK
_BOSS
74F08
U710
_BGACK30
_BR
_CBR
_BR30
U103
VALUE
C103
.01uF
R101
22
J101
FPU CLCCK
FPUCLK
J102
BOARD CLOCK
CPUCLK
U106
74F74
CPU CLOCK
J104
R100
CLK30
U104
VALUE
C104
.01uF
U102
DELFYLINE
J100
CLK90
R106
CLK90
U106
C106
.1uF
U102
C102
.1uF
C107
22uF
74F04
U2E4
U100
MC68030
IF CPU - PGA
IF CPU - SMD
U101
MC68881
IF FPU - PGA
IF FPU - SMD

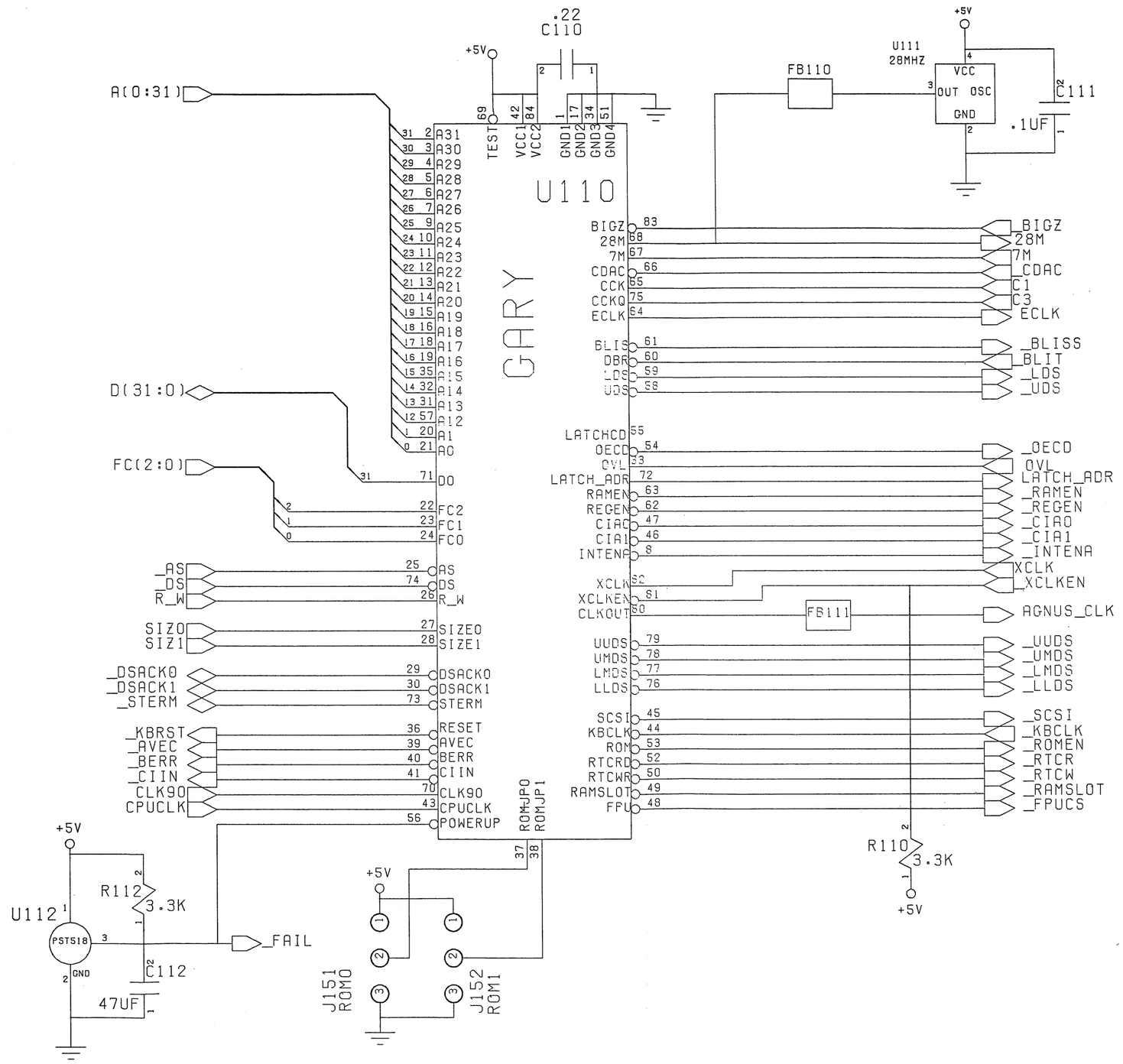
A(0:31)
D(31:0)
FC(2:0)
_AS
_DS
R_W
SIZ0
SIZ1
_DSACK0
_DSACK1
_STERM
_KBRST
_AVEC
_BERR
_CIIN
CLK90
CPUCLK
+5V
.22
C110
U110
GARY
TEST
VCC1
VCC2
GND1
GND2
GND3
GND4
A31
A30
A29
A28
A27
A26
A25
A24
A23
A22
A21
A20
A19
A18
A17
A16
A15
A14
A13
A12
A1
A0
D0
FC2
FC1
FC0
AS
DS
R_W
SIZE0
SIZE1
DSACK0
DSACK1
STERM
RESET
AVEC
BERR
CIIN
CLK90
CPUCLK
POWERUP
ROMUP0
ROMUP1
BIGZ
28M
7M
CDAC
CCK
CCKQ
ECLK
BLIS
DBR
LDS
UDS
LATCHCD
OECD
OVL
LATCH_ADR
RAMEN
REGEN
CIAC
CIA1
INTENA
XCLK
XCLKEN
CLKOUT
UUDS
UMDS
LMDS
LLDS
SCSI
KBCLK
ROM
RTCRD
RTCWR
RAMSLOT
FPU
_BIGZ
28M
7M
_CDAC
C1
C3
ECLK
_BLISS
_BLIT
_LDS
_UDS
_OECD
OVL
LATCH_ADR
_RAMEN
_REGEN
_CIAO
_CIA1
_INTENA
XCLK
_XCLKEN
AGNUS_CLK
_UUDS
_UMDS
_LMDS
_LLDS
_SCSI
_KBCLK
_ROMEN
_RTCR
_RTCW
_RAMSLOT
_FPUCS
FB110
U111
28MHZ
VCC
OUT OSC
GND
C111
.1UF
FB111
R110
3.3K
R112
3.3K
U112
PST518
GND
C112
47UF
_FAIL
J151
ROM0
J152
ROM1

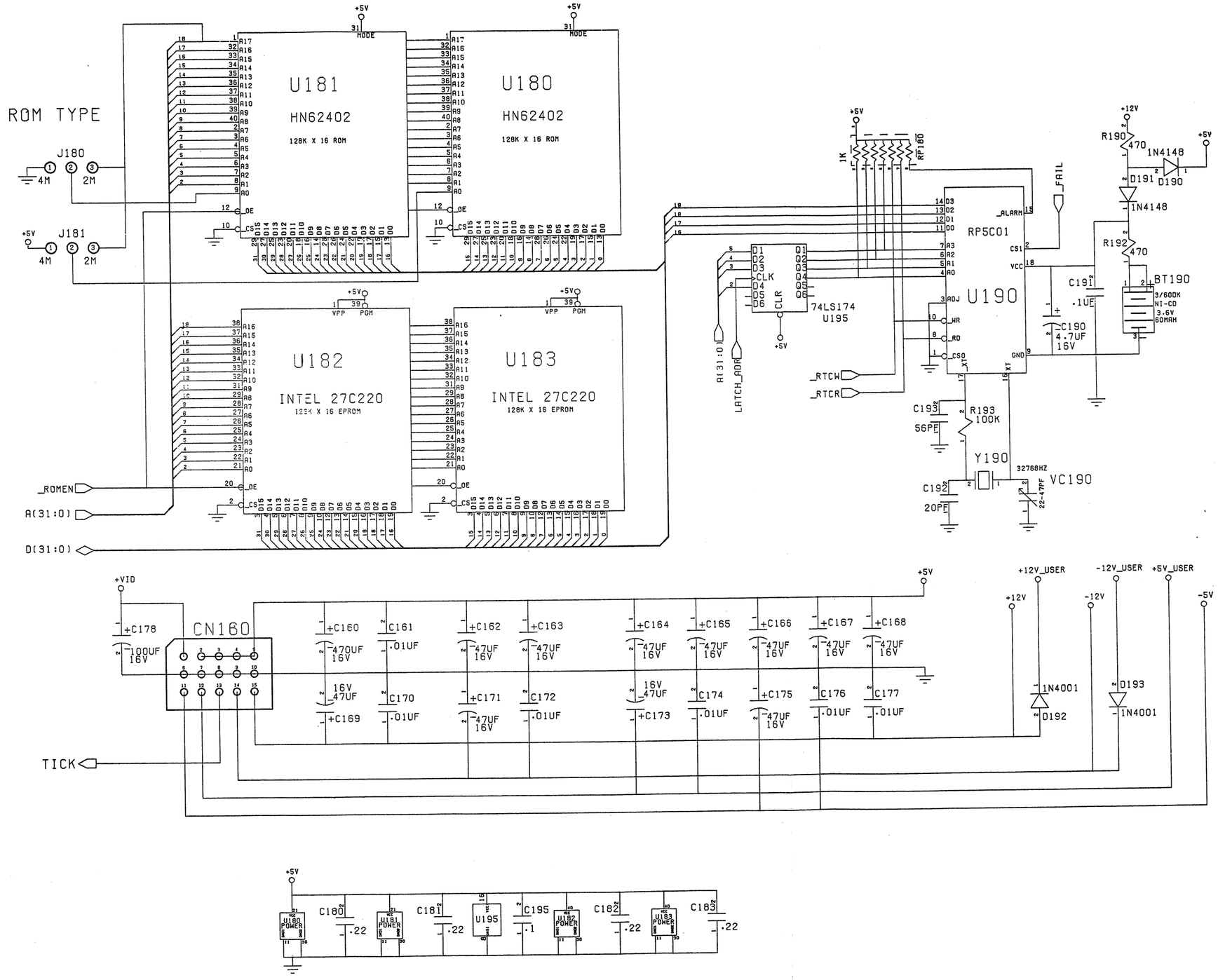
ROM TYPE
J180
4M
2M
J181
U181
HN62402
128K X 16 ROM
U180
HN62402
128K X 16 ROM
U182
INTEL 27C220
128K X 16 EPROM
U183
INTEL 27C220
128K X 16 EPROM
_ROMEN
A(31:0)
D(31:0)
74LS174
U195
LATCH_ADR
_RTCW
_RTCR
RP5C01
U190
_ALARM
_FAIL
R190
470
1N4148
D190
D191
R192
BT190
3/600K
NI-CD
3.6V
60MAH
C191
.1UF
C190
4.7UF
16V
C193
56PF
R193
100K
Y190
32768HZ
C192
20PF
VC190
22-47PF
CN160
TICK
+VID
+C178
100UF
16V
+C160
47UF
16V
C161
.01UF
+C162
+C163
+C164
+C165
+C166
+C167
+C168
+C169
C170
+C171
C172
+C173
C174
+C175
C176
C177
+12V_USER
-12V_USER
+5V_USER
+12V
-12V
-5V
1N4001
D192
D193
U180
POWER
U181
POWER
U182
POWER
U183
POWER
C180
.22
C181
C195
.1
C182
C183

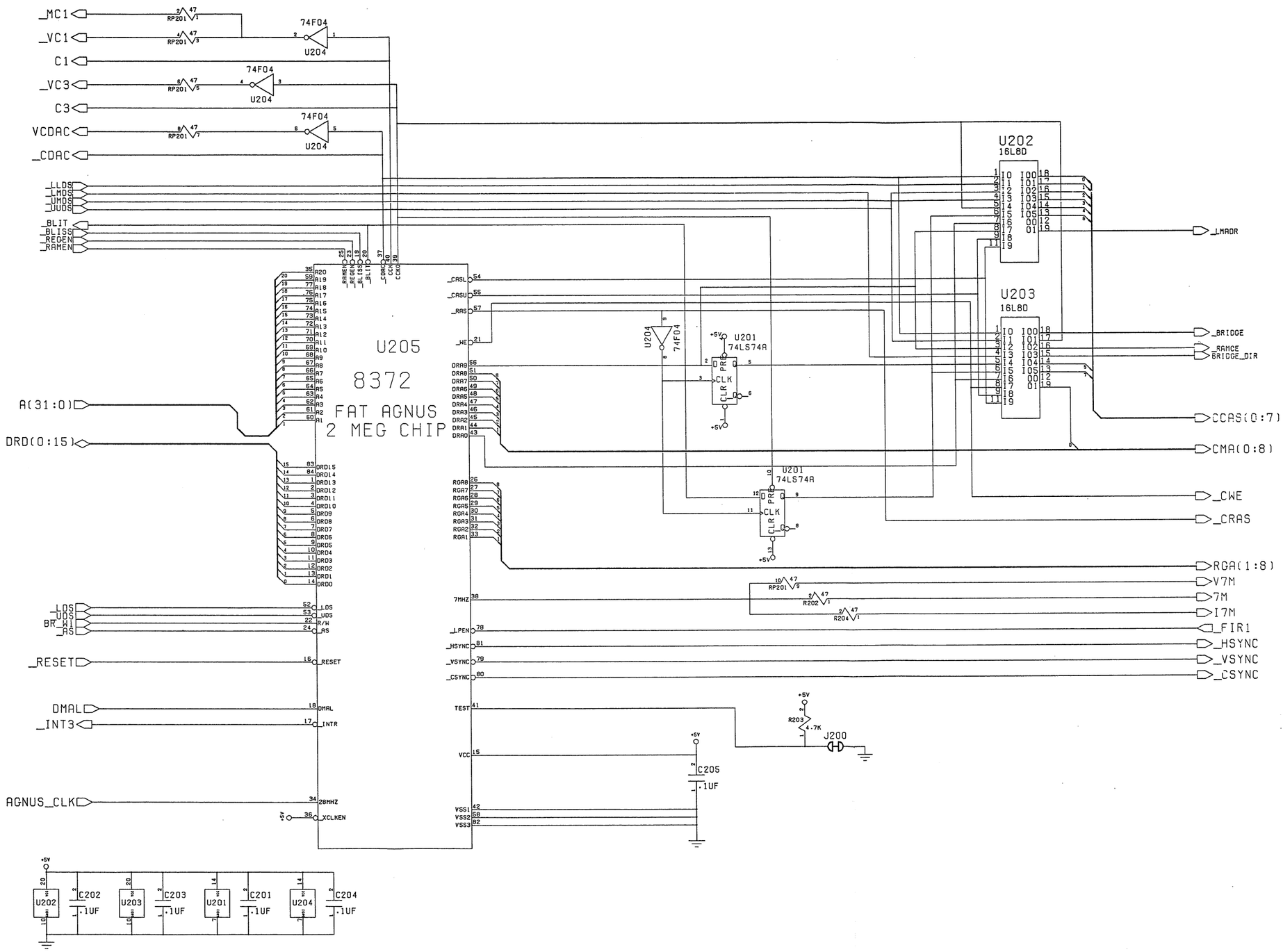
_MC1
_VC1
C1
_VC3
C3
VCDAC
_CDAC
_LLDS
_LMDS
_UMDS
_UUDS
_BLIT
_BLISS
_REGEN
_RAMEN
A(31:0)
DRD(0:15)
_LDS
_UDS
BR_W1
_AS
_RESET
DMAL
_INT3
AGNUS_CLK
U205
8372
FAT AGNUS
2 MEG CHIP
74F04
U204
RP201
U202
16L80
U203
16L80
U201
74LS74A
_LMADR
_BRIDGE
_RAMCE
BRIDGE_DIR
CCAS(0:7)
CMA(0:8)
_CWE
_CRAS
RGA(1:8)
V7M
7M
I7M
_FIR1
_HSYNC
_VSYNC
_CSYNC
R202
R204
R203
4.7K
J200
C205
.1UF
C202
C203
C201
C204

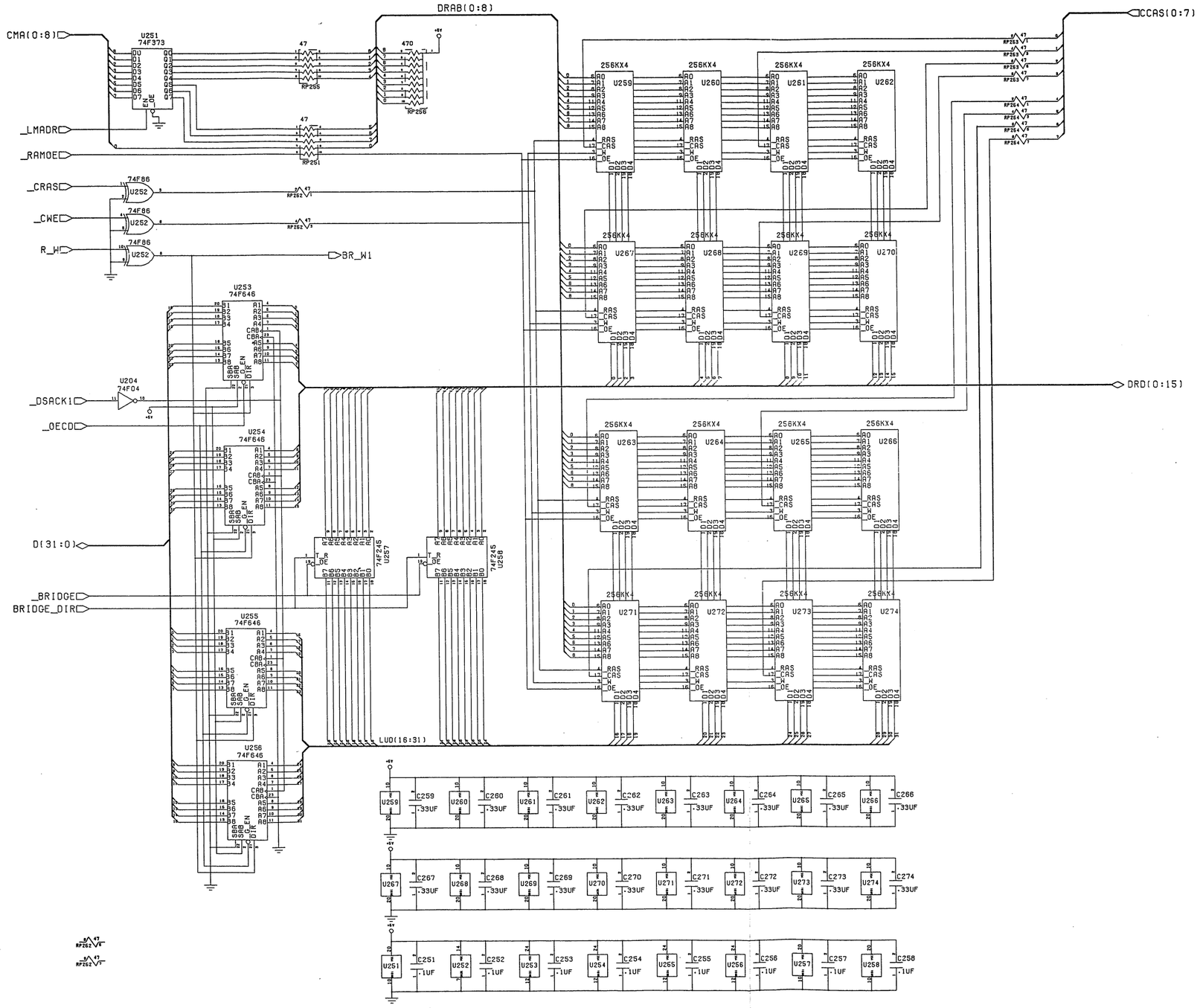
CMA(0:8)
U251
74F373
DRAB(0:8)
CCAS(0:7)
_LMADR
_RAMOE
_CRAS
_CWE
R_W
BR_W1
U252
74F86
U253
74F646
U254
74F646
U255
74F646
U256
74F646
U204
74F04
_DSACK1
_OECD
D(31:0)
_BRIDGE
BRIDGE_DIR
74F245
U257
74F245
U258
256KX4
U259
U260
U261
U262
U263
U264
U265
U266
U267
U268
U269
U270
U271
U272
U273
U274
DRD(0:15)
LUD(16:31)
RP255
RP256
RP251
RP252
RP253
RP254
C259
C260
C261
C262
C263
C264
C265
C266
C267
C268
C269
C270
C271
C272
C273
C274
C251
C252
C253
C254
C255
C256
C257
C258
.33UF
.1UF

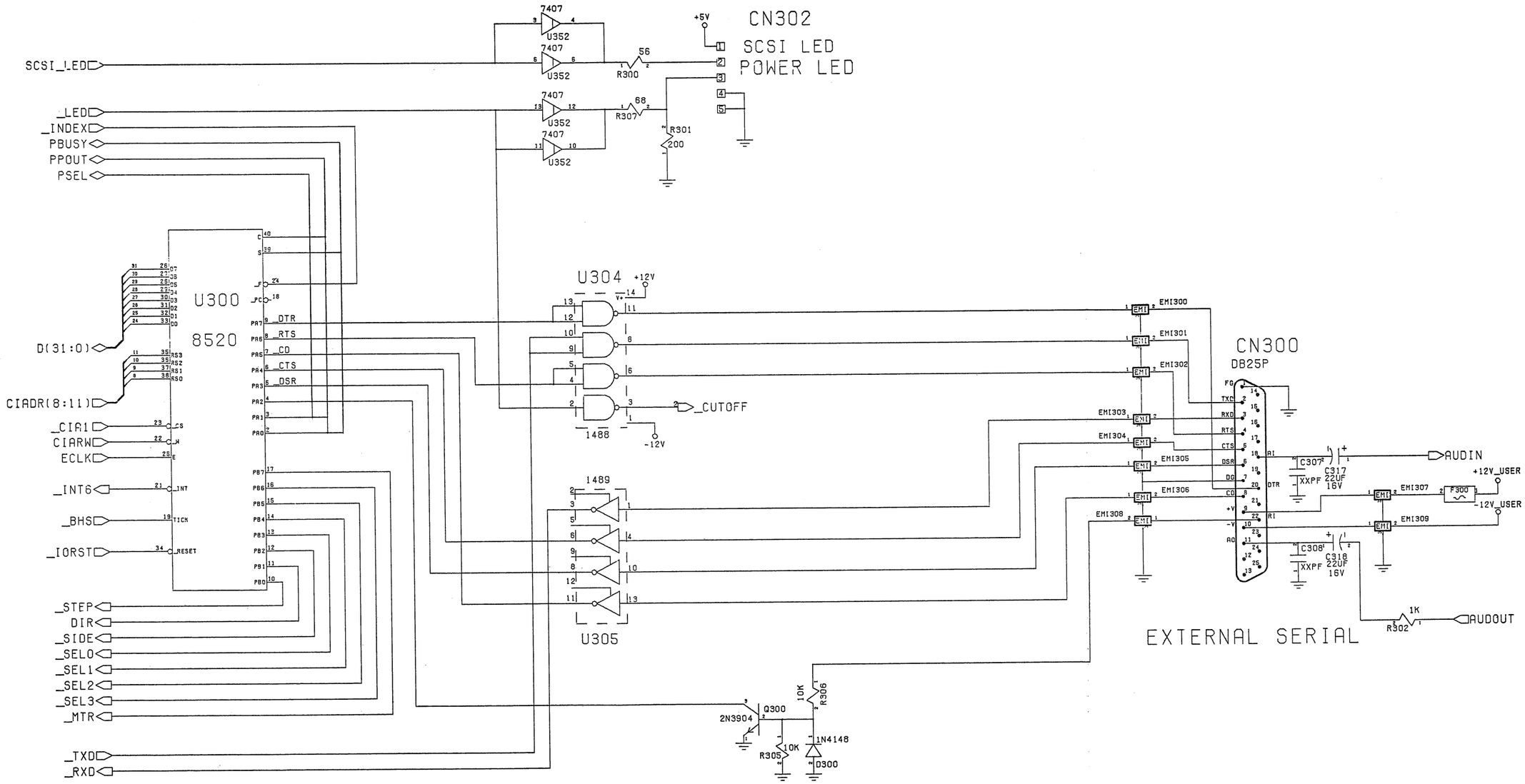
SCSI_LED
_LED
_INDEX
PBUSY
PPOUT
PSEL
7407
U352
R300
56
R307
68
R301
200
+5V
CN302
SCSI LED
POWER LED
U300
8520
D(31:0)
CIADR(8:11)
_CIA1
CIARW
ECLK
_INT6
_BHS
_IORST
_STEP
DIR
_SIDE
_SEL0
_SEL1
_SEL2
_SEL3
_MTR
_TXD
_RXD
_DTR
_RTS
_CD
_CTS
_DSR
U304
+12V
-12V
1488
_CUTOFF
1489
U305
EMI300
EMI301
EMI302
EMI303
EMI304
EMI305
EMI306
EMI307
EMI308
EMI309
CN300
DB25P
C307
XXPF
C317
22UF
16V
C308
C318
22UF
16V
AUDIN
+12V_USER
-12V_USER
F300
AUDOUT
R302
1K
EXTERNAL SERIAL
Q300
2N3904
R306
10K
R305
10K
1N4148
D300

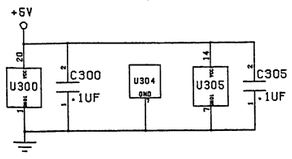
+5V
U300
C300
.1UF
U304
U305
C305
.1UF

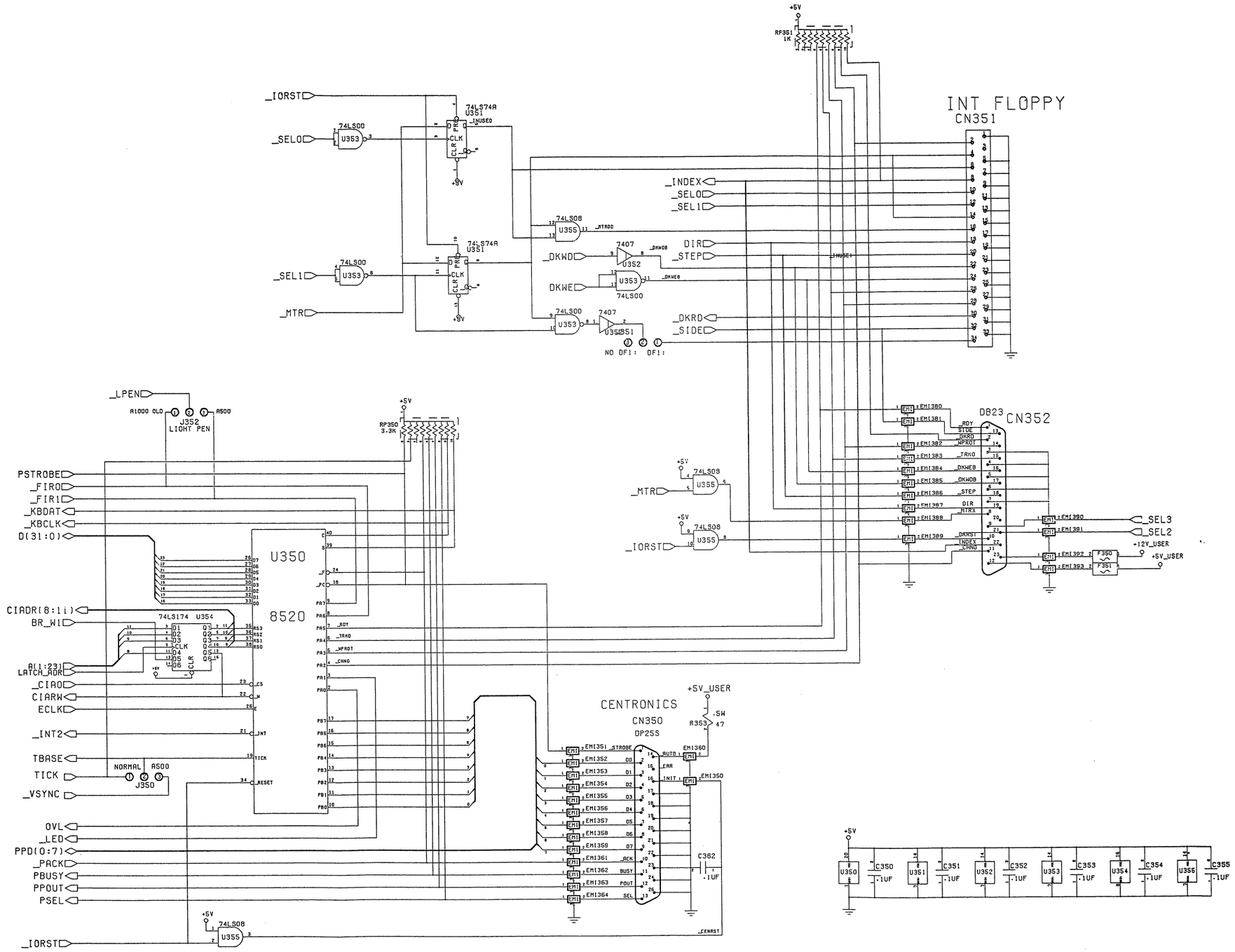
INT FLOPPY
CN351
CN352
DB23
CENTRONICS
CN350
DP25S
J352
LIGHT PEN
J350
U350
8520
74LS174 U354
74LS74A U351
74LS00 U353
74LS08 U355
7407 U352
RP351 1K
RP350 3.3K
_IORST
_SELO
_SEL1
_MTR
_INDEX
DIR
_STEP
_DKWD
_DKWE
_DKRD
_SIDE
_SEL3
_SEL2
+12V_USER
+5V_USER
PSTROBE
_FIRO
_FIR1
_KBDAT
_KBCLK
D(31:0)
CIADR(8:1i)
BR_WI
A(1:23)
LATCH_ADR
_CIAO
CIARW
ECLK
_INT2
TBASE
TICK
_VSYNC
OVL
_LED
PPD(0:7)
_PACK
PBUSY
PPOUT
PSEL
_LPEN
NORMAL
A500
A1000 OLD
NO DF1:
DF1:
R353 47
C362 .1UF
C350 .1UF
C351 .1UF
C352 .1UF
C353 .1UF
C354 .1UF
C355 .1UF

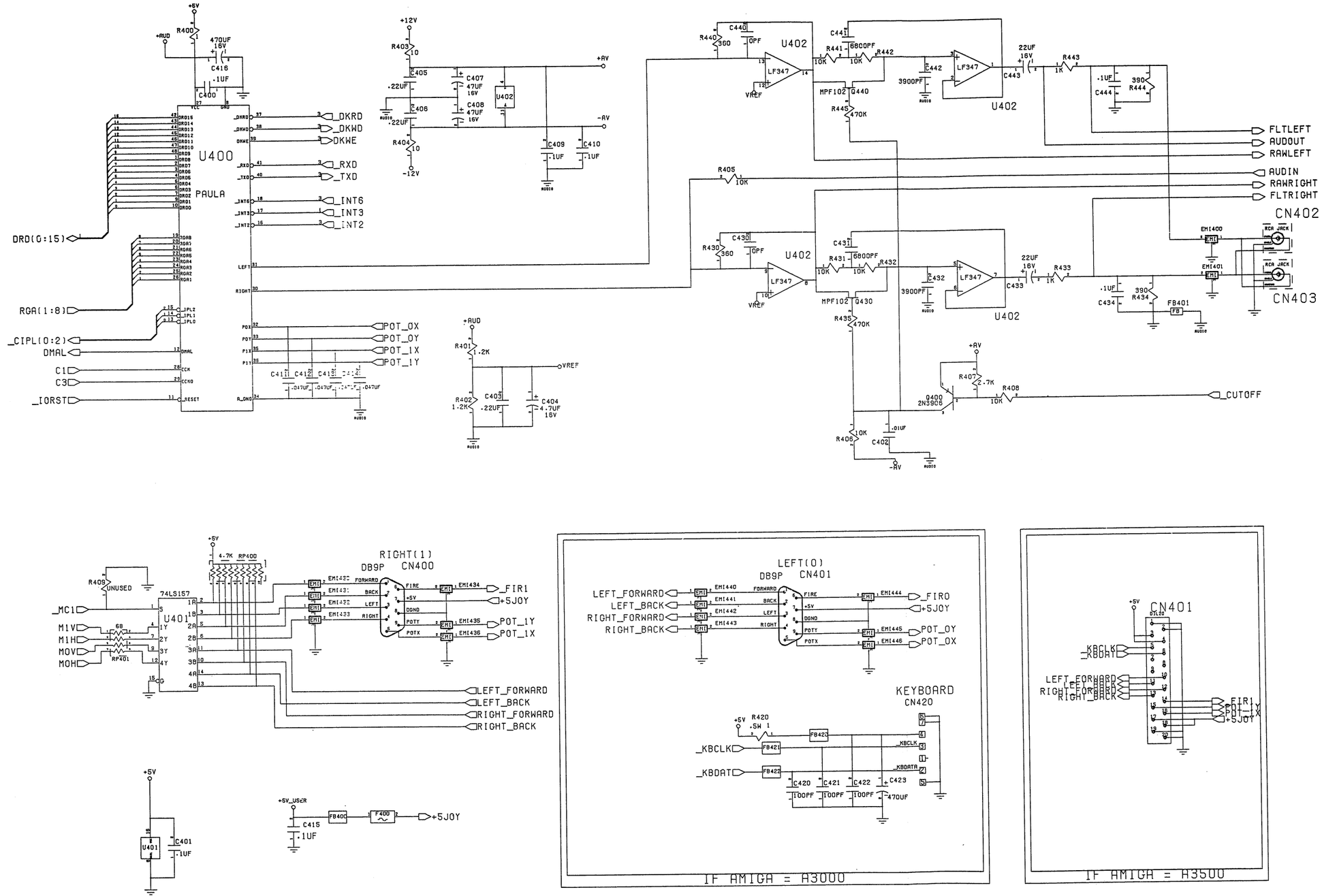
U400
PAULA
DRD(0:15)
RGA(1:8)
_CIPL(0:2)
DMAL
C1
C3
_IORST
_DKRD
_DKWD
DKWE
_RXD
_TXD
_INT6
_INT3
_INT2
POT_0X
POT_0Y
POT_1X
POT_1Y
U402
LF347
MPF102
FLTLEFT
AUDOUT
RAWLEFT
AUDIN
RAWRIGHT
FLTRIGHT
CN402
CN403
_CUTOFF
VREF
U401
74LS157
RIGHT(1)
DB9P CN400
LEFT(0)
DB9P CN401
FIRE
+5V
DGND
POTY
POTX
FORWARD
BACK
LEFT
RIGHT
_FIR1
+5JOY
POT_1Y
POT_1X
_FIR0
POT_0Y
POT_0X
LEFT_FORWARD
LEFT_BACK
RIGHT_FORWARD
RIGHT_BACK
KEYBOARD
CN420
_KBCLK
_KBDAT
CN401
IF AMIGA = A3000
IF AMIGA = A3500

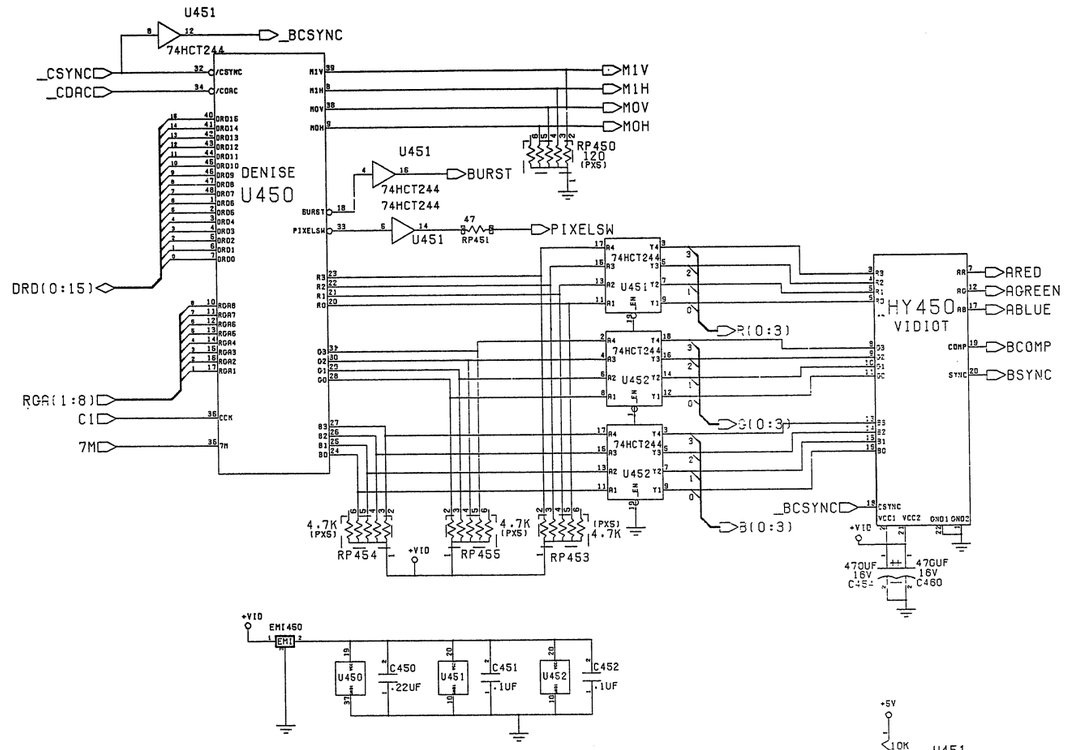
U451
74HCT244
_BCSYNC
_CSYNC
_CDAC
DENISE
U450
DRD(0:15)
RGA(1:8)
C1
7M
M1V
M1H
MOV
MOH
BURST
PIXELSW
RP450
120
(PXS)
RP451
47
U451
74HCT244
74HCT244
U451
74HCT244
U451
U452
U452
R(0:3)
G(0:3)
B(0:3)
HY450
VIDIOT
ARED
AGREEN
ABLUE
BCOMP
BSYNC
_BCSYNC
4.7K
(PXS)
RP454
RP455
RP453
+VIO
EMI450
C450
.22UF
C451
.1UF
C452
.1UF
470UF
16V
C454
C460

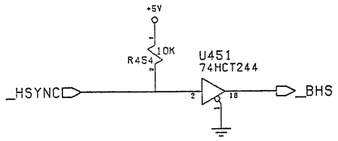
+5V
R454
10K
U451
74HCT244
_HSYNC
_BHS

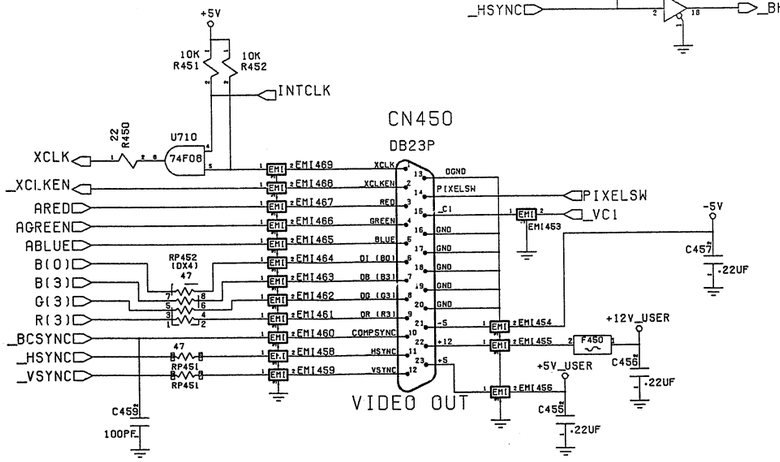
+5V
10K
R451
10K
R452
INTCLK
22
R450
U710
74F08
XCLK
_XCLKEN
ARED
AGREEN
ABLUE
B(0)
B(3)
G(3)
R(3)
_BCSYNC
_HSYNC
_VSYNC
RP452
(DX4)
47
RP451
C459
100PF
CN450
DB23P
VIDEO OUT
PIXELSW
_C1
_VC1
EMI453
-5V
C457
.22UF
+12V_USER
F450
C456
.22UF
+5V_USER
C455
.22UF

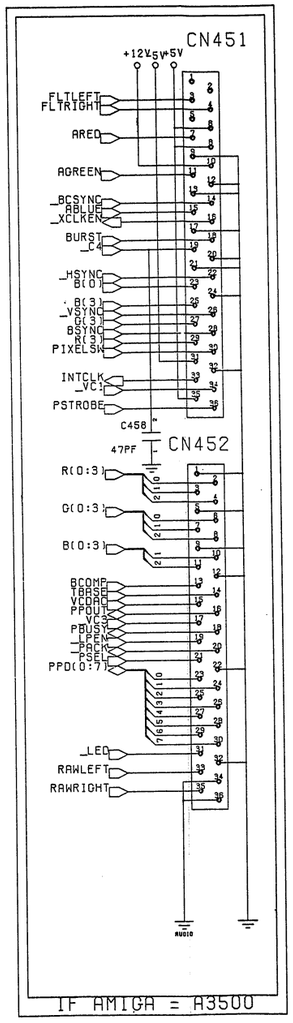
CN451
+12V
+5V
+5V
FLTLEFT
FLTRIGHT
ARED
AGREEN
_BCSYNC
ABLUE
_XCLKEN
BURST
_C4
_HSYNC
B(0)
B(3)
_VSYNC
G(3)
BSYNC
R(3)
PIXELSW
INTCLK
_VC1
PSTROBE
C458
47PF
CN452
R(0:3)
G(0:3)
B(0:3)
BCOMP
TBASE
VCDAC
PPOUT
VCS
PBUSY
_PEN
_PACK
_PSEL
PPD(0:7)
_LED
RAWLEFT
RAWRIGHT
IF AMIGA = A3500

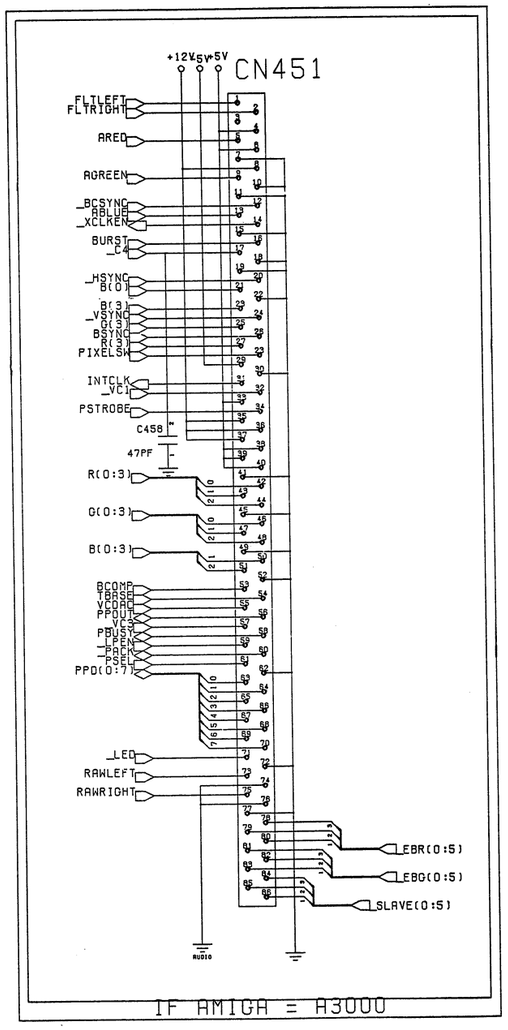
CN451
+12V
+5V
+5V
FLTLEFT
FLTRIGHT
ARED
AGREEN
_BCSYNC
ABLUE
_XCLKEN
BURST
_C4
_HSYNC
B(0)
B(3)
_VSYNC
G(3)
BSYNC
R(3)
PIXELSW
INTCLK
_VC1
PSTROBE
C458
47PF
R(0:3)
G(0:3)
B(0:3)
BCOMP
TBASE
VCDAC
PPOUT
VCS
PBUSY
_PEN
_PACK
_PSEL
PPD(0:7)
_LED
RAWLEFT
RAWRIGHT
EBR(0:5)
EBG(0:5)
SLAVE(0:5)
IF AMIGA = A3000

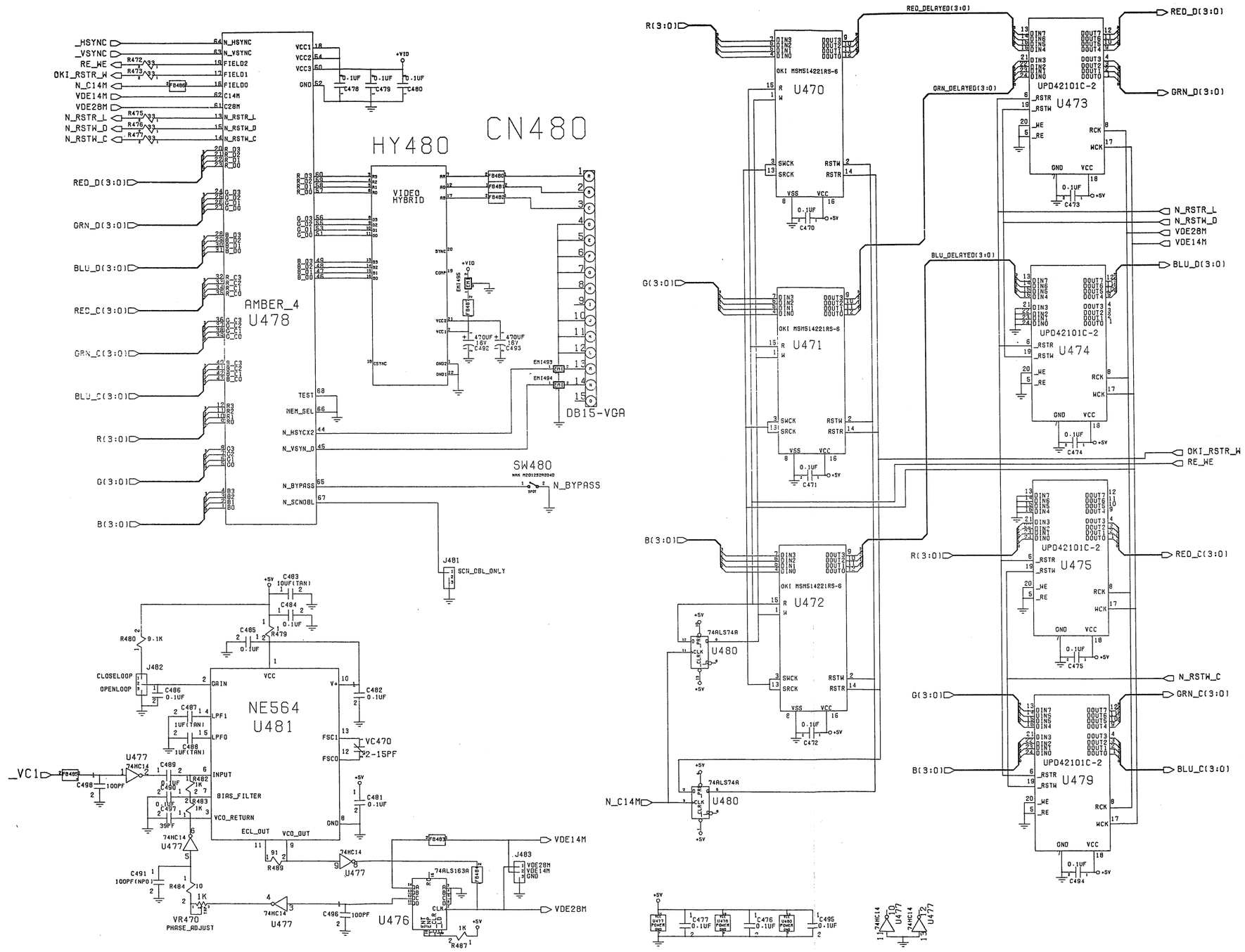
AMBER_4
U478
HY480
VIDEO HYBRID
CN480
DB15-VGA
SW480
N_BYPASS
J481
SCN_DBL_ONLY
NE564
U481
VC470
32-15PF
VR470
PHASE_ADJUST
U476
74ALS163A
J483
VDE14M
VDE28M
U477
74HC14
U480
74ALS74A
U470
U471
U472
U473
U474
U475
U479
OKI MSM514221RS-6
UPD42101C-2
RED_DELAYED(3:0)
GRN_DELAYED(3:0)
BLU_DELAYED(3:0)
RED_D(3:0)
GRN_D(3:0)
BLU_D(3:0)
RED_C(3:0)
GRN_C(3:0)
BLU_C(3:0)
N_RSTR_L
N_RSTW_D
VDE28M
VDE14M
OKI_RSTR_W
RE_WE
N_RSTW_C
N_C14M
_VC1

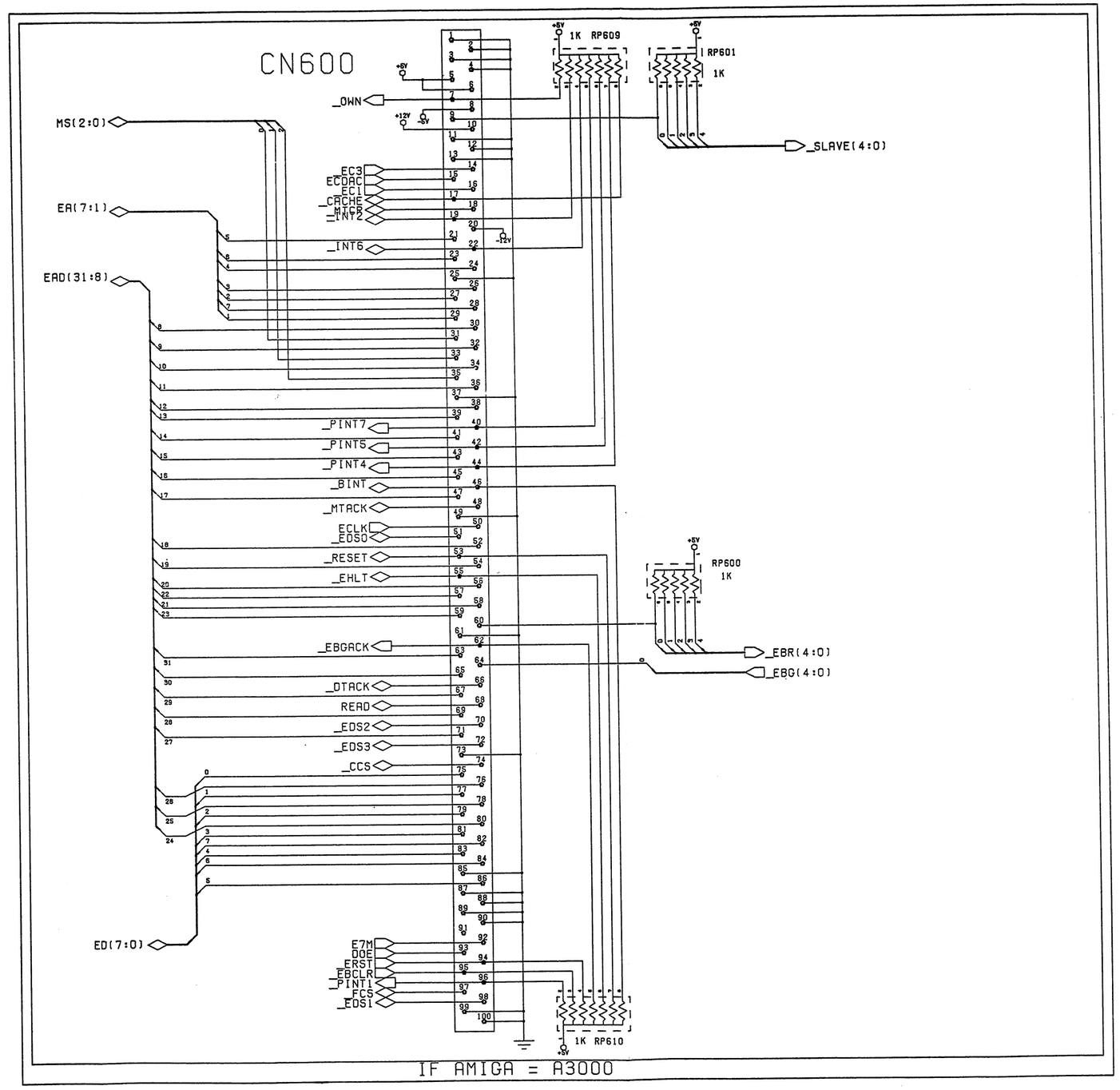
CN600
MS(2:0)
EA(7:1)
EAD(31:8)
ED(7:0)
_OWN
_EC3
ECDAC
_EC1
_CACHE
_MTCR
_INT2
_INT6
_PINT7
_PINT5
_PINT4
_BINT
_MTACK
ECLK
_EDS0
_RESET
_EHLT
_EBGACK
_DTACK
READ
_EDS2
_EDS3
_CCS
E7M
DOE
ERST
_EBCLR
_PINT1
FCS
_EDS1
1K RP609
RP601
1K
_SLAVE(4:0)
RP600
1K
_EBR(4:0)
_EBG(4:0)
1K RP610
IF AMIGA = A3000

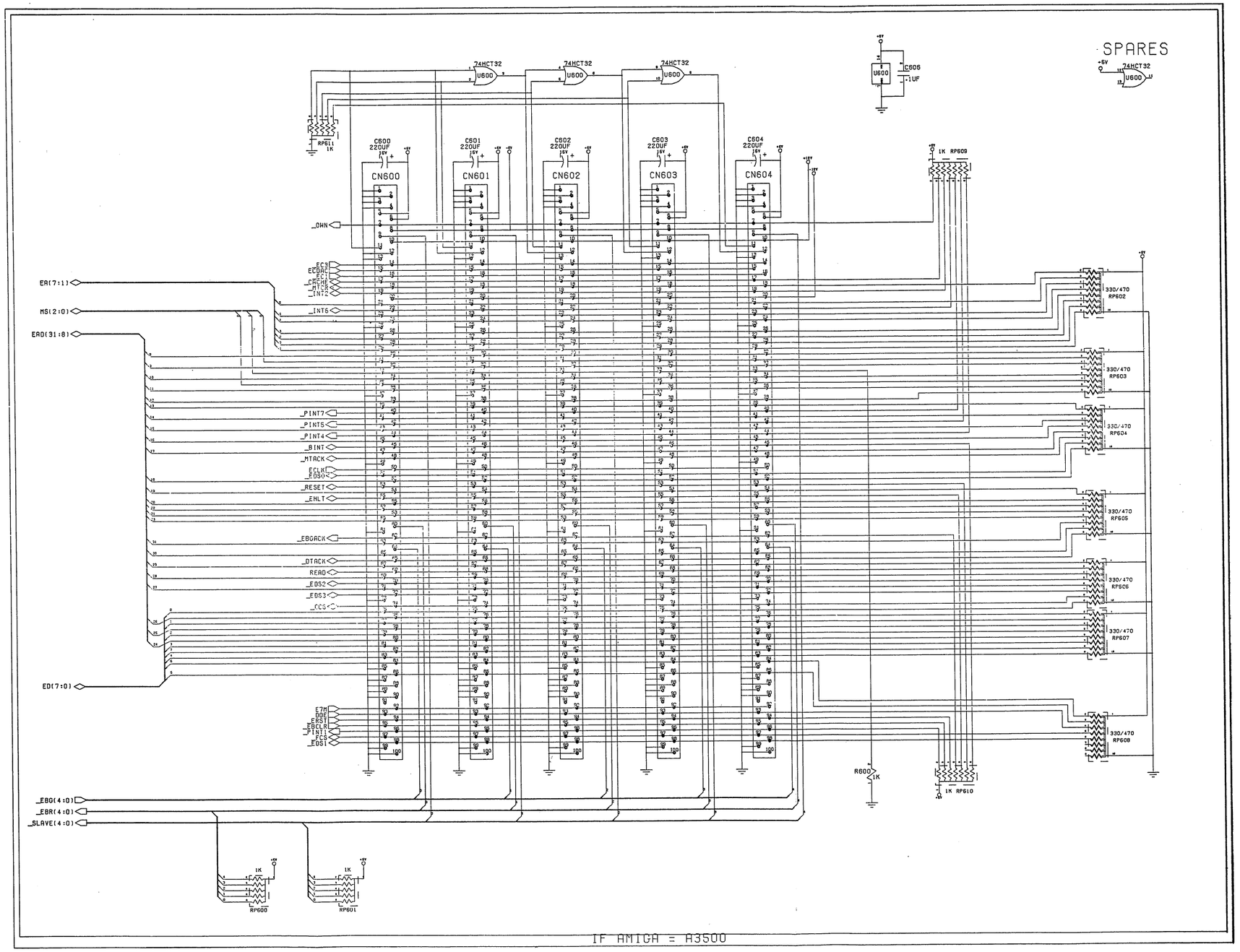
SPARES
74HCT32
U600
C606
1UF
RP611
1K
C600
220UF
16V
C601
C602
C603
C604
CN600
CN601
CN602
CN603
CN604
1K RP609
_OWN
ECS
ECDAC
ECI
_CACHE
MTCR
_INT2
_INT6
ER(7:1)
MS(2:0)
ERD(31:8)
_PINT7
_PINT5
_PINT4
_BINT
_MTACK
ECLK
_ECSO
_RESET
_EHLT
_EBGACK
_DTACK
READ
_ECS2
_ECS3
_CCS
ED(7:0)
E7M
OOE
_ERSI
_EBCLR
_PINT1
_ECS
_ECS1
_EBG(4:0)
_EBR(4:0)
_SLAVE(4:0)
330/470
RP602
RP603
RP604
RP605
RP606
RP607
RP608
R600
1K
1K RP610
RP600
RP601
IF AMIGA = A3500

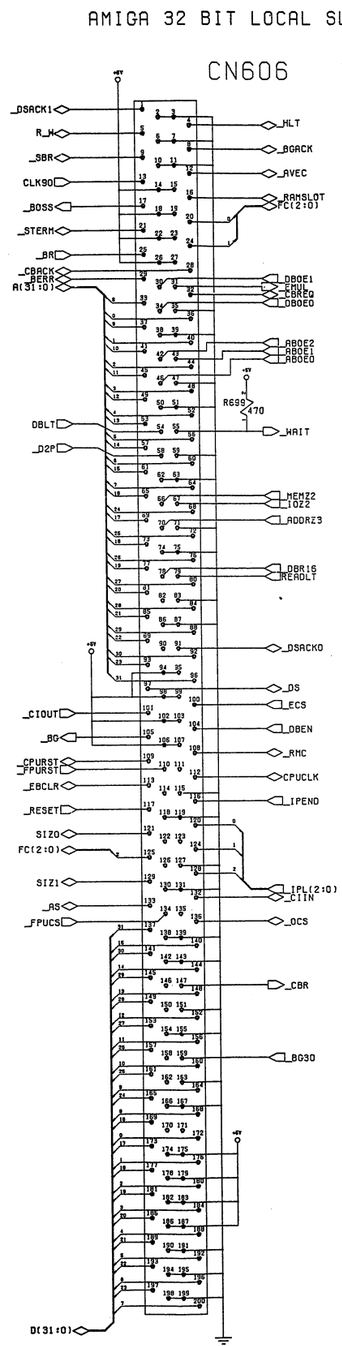
AMIGA 32 BIT LOCAL SLOT
CN606
_DSACK1
R_W
_SBR
CLK90
_BOSS
_STERM
_BR
_CBACK
_BERR
A(31:0)
DBLT
_D2P
_CIOUT
_BG
_CPURST
_FPURST
_EBCLR
_RESET
SIZ0
FC(2:0)
SIZ1
_AS
_FPUCS
D(31:0)
_HLT
_BGACK
_AVEC
_RAMSLOT
FC(2:0)
_DBOE1
_ENU
_CBREQ
_DBOE0
_ABOE2
_ABOE1
_ABOE0
R699
470
_WAIT
_MEMZ2
_IOZ2
_ADDRZ3
_DBR16
_READLT
_DSACK0
_DS
_ECS
_DBEN
_RMC
_CPUCLK
_IPEND
_IPL(2:0)
_CIIN
_OCS
_CBR
_BG30

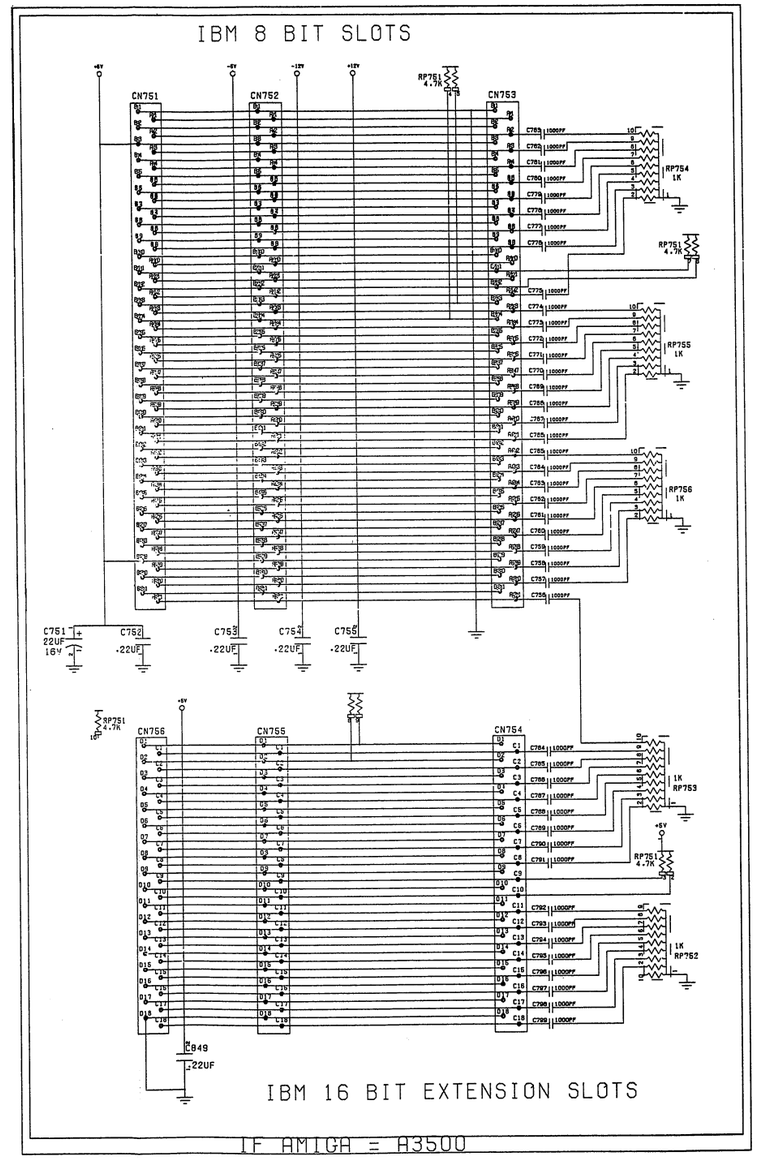
IBM 8 BIT SLOTS
CN751
CN752
CN753
RP751 4.7K
RP754 1K
RP755 1K
RP756 1K
C751 22UF 16V
C752 .22UF
C753 .22UF
C754 .22UF
C755 .22UF
CN756
CN755
CN754
RP751 4.7K
1K RP753
1K RP752
C849 .22UF
IBM 16 BIT EXTENSION SLOTS
IF AMIGA = A3500

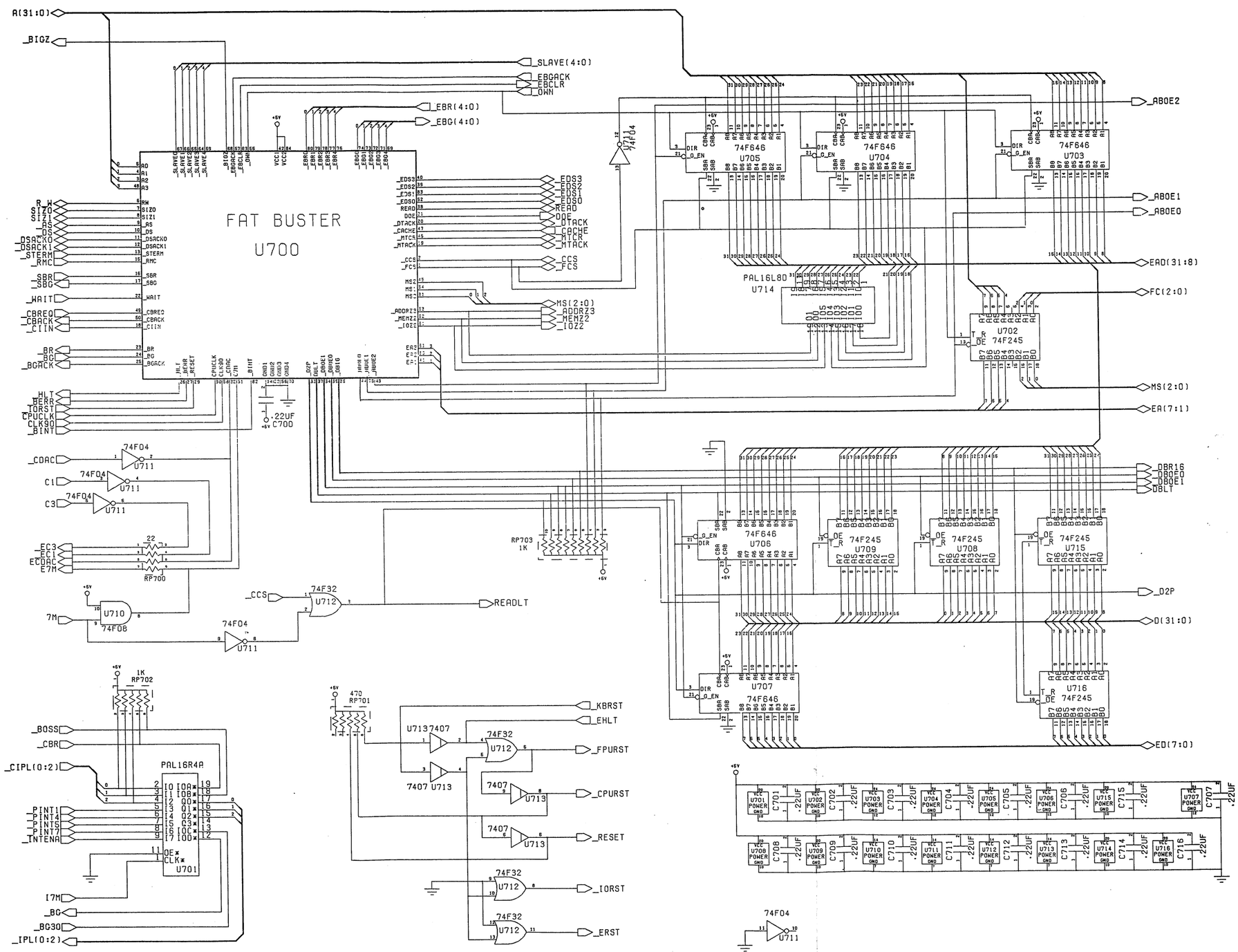
FAT BUSTER
U700
74F646
U705
U704
U703
U706
U707
74F245
U702
U708
U709
U715
U716
PAL16L8D
U714
PAL16R4A
U701
74F04
U711
74F08
U710
74F32
U712
7407
U713
RP700
RP702
RP703
RP701
C700
A(31:0)
_BIGZ
_SLAVE(4:0)
_EBACK
_EBCLR
_OWN
_EBR(4:0)
_EBG(4:0)
_ABOE2
_ABOE1
_ABOE0
EAD(31:8)
FC(2:0)
MS(2:0)
EA(7:1)
_DBR16
_DBOE0
_DBOE1
_DBLT
_D2P
D(31:0)
ED(7:0)
_EDS3
_EDS2
_EDS1
_EDS0
_READ
_DOE
_DTACK
_CACHE
_MTCR
_MTACK
_CCS
_FCS
_ADDRZ3
_MENZ2
_IOZ2
R_W
SIZ0
SIZ1
_AS
_DS
_DSACK0
_DSACK1
_STERM
_RMC
_SBR
_SBG
_WAIT
_CBREQ
_CBACK
_CIN
_BR
_BG
_BGACK
_HLT
_BERR
_TORST
CPUCLK
CLK90
_BINT
_CDAC
C1
C3
_EC3
_EC1
ECDAC
E7M
7M
READLT
_BOSS
_CBR
_CIPL(0:2)
_PINT1
_PINT4
_PINT5
_PINT7
_INTENA
I7M
_BG
_BG30
_IPL(0:2)
_KBRST
_EHLT
_FPURST
_CPURST
_RESET
_IORST
_ERST
.22UF
C701
C702
C703
C704
C705
C706
C707
C708
C709
C710
C711
C712
C713
C714
C715
C716

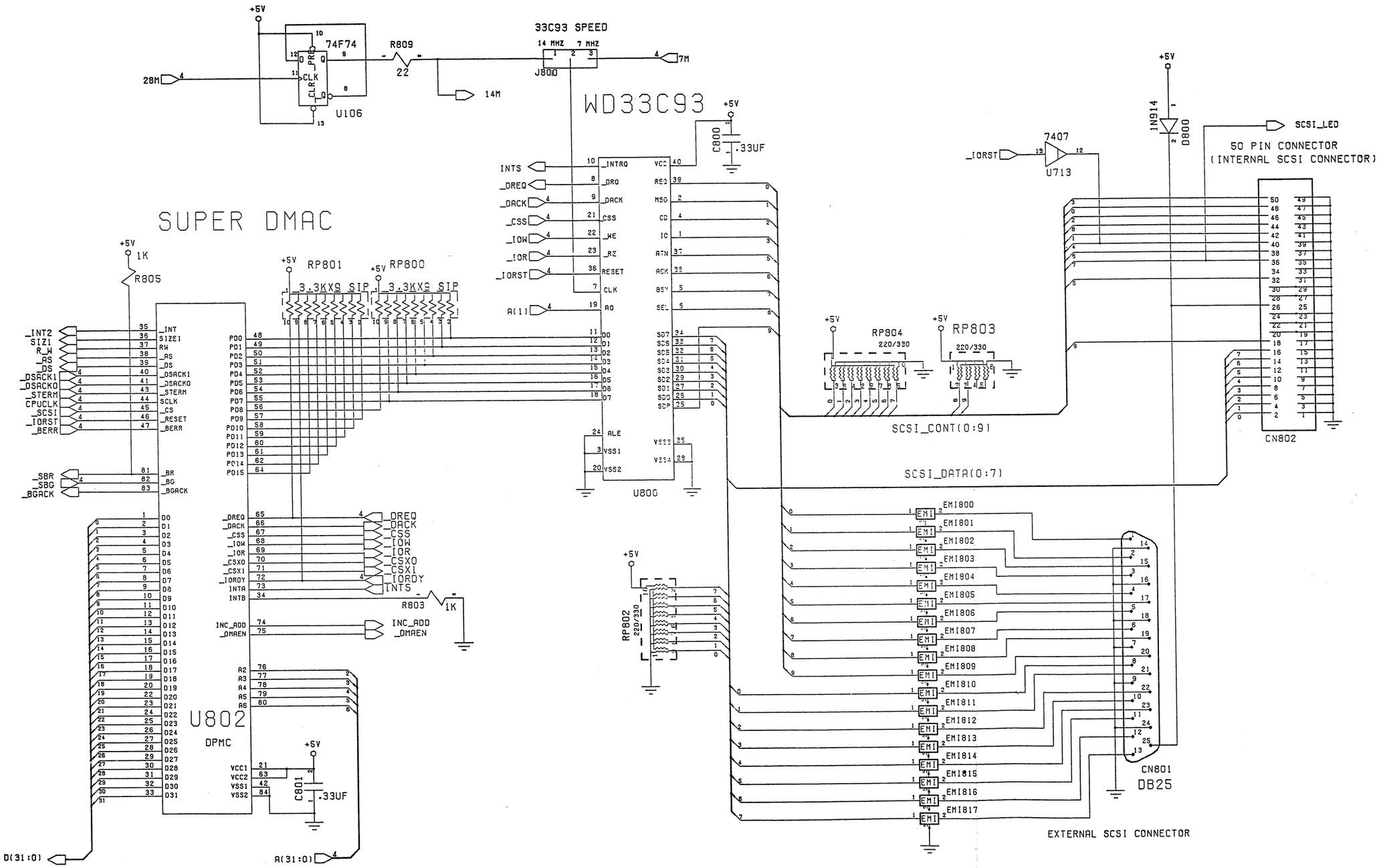
+5V
74F74
U106
28M
R809
22
14M
33C93 SPEED
14 MHZ
7 MHZ
J800
7M
WD33C93
C800
.33UF
SUPER DMAC
R805
1K
RP801
3.3KX9 SIP
RP800
3.3KX9 SIP
U802
DPMC
C801
.33UF
D(31:0)
A(31:0)
U800
7407
U713
_IORST
1N914
D800
SCSI_LED
50 PIN CONNECTOR
(INTERNAL SCSI CONNECTOR)
CN802
RP804
220/330
RP803
220/330
SCSI_CONT(0:9)
SCSI_DATA(0:7)
RP802
220/330
CN801
DB25
EXTERNAL SCSI CONNECTOR

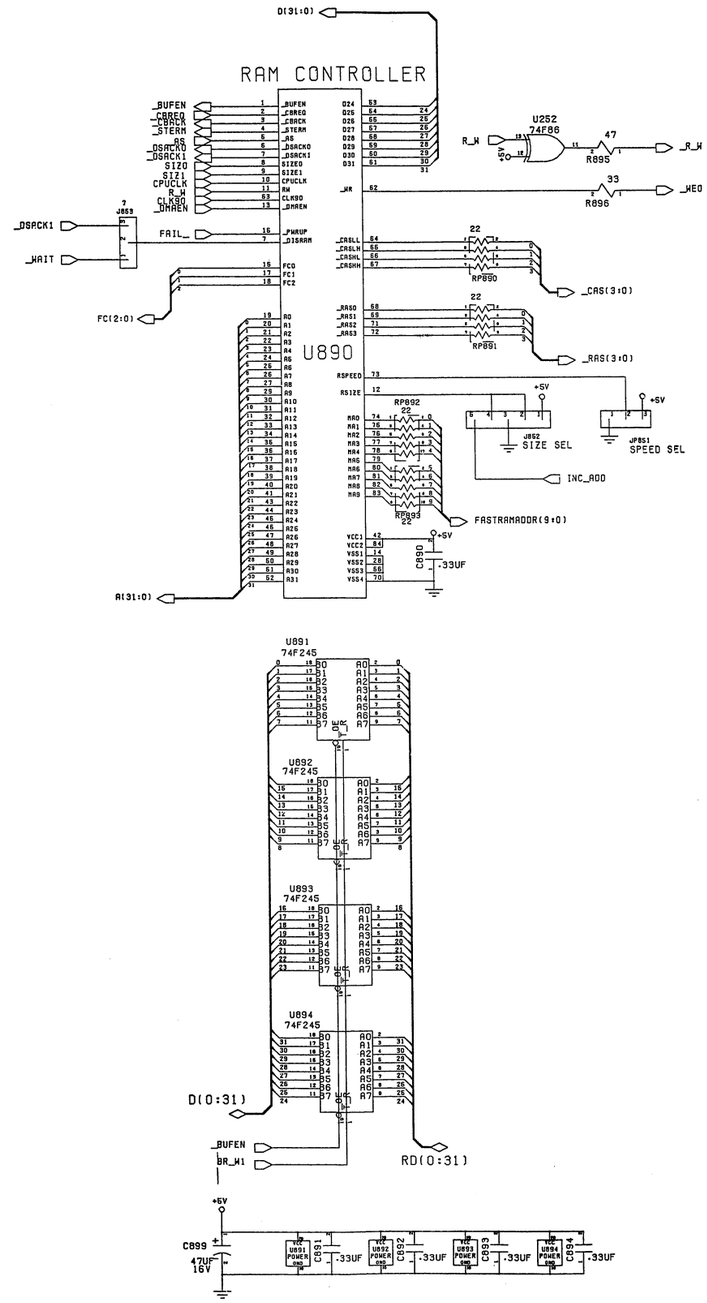
RAM CONTROLLER
U890
D(31:0)
A(31:0)
_BUFEN
_CBREQ
_CBACK
_STERM
AS
_DSACK0
_DSACK1
SIZ0
SIZ1
CPUCLK
R_W
CLK90
_DRAEN
_DSACK1
_WAIT
FAIL_
FC(2:0)
_CAS(3:0)
_RAS(3:0)
FASTRAMADDR(9:0)
INC_ADD
SIZE SEL
SPEED SEL
U252
74F86
R_W
_WEO
R895
R896
RP890
RP891
RP892
RP893
C890
.33UF
U891
74F245
U892
74F245
U893
74F245
U894
74F245
D(0:31)
RD(0:31)
_BUFEN
BR_W1
C899
47UF
16V

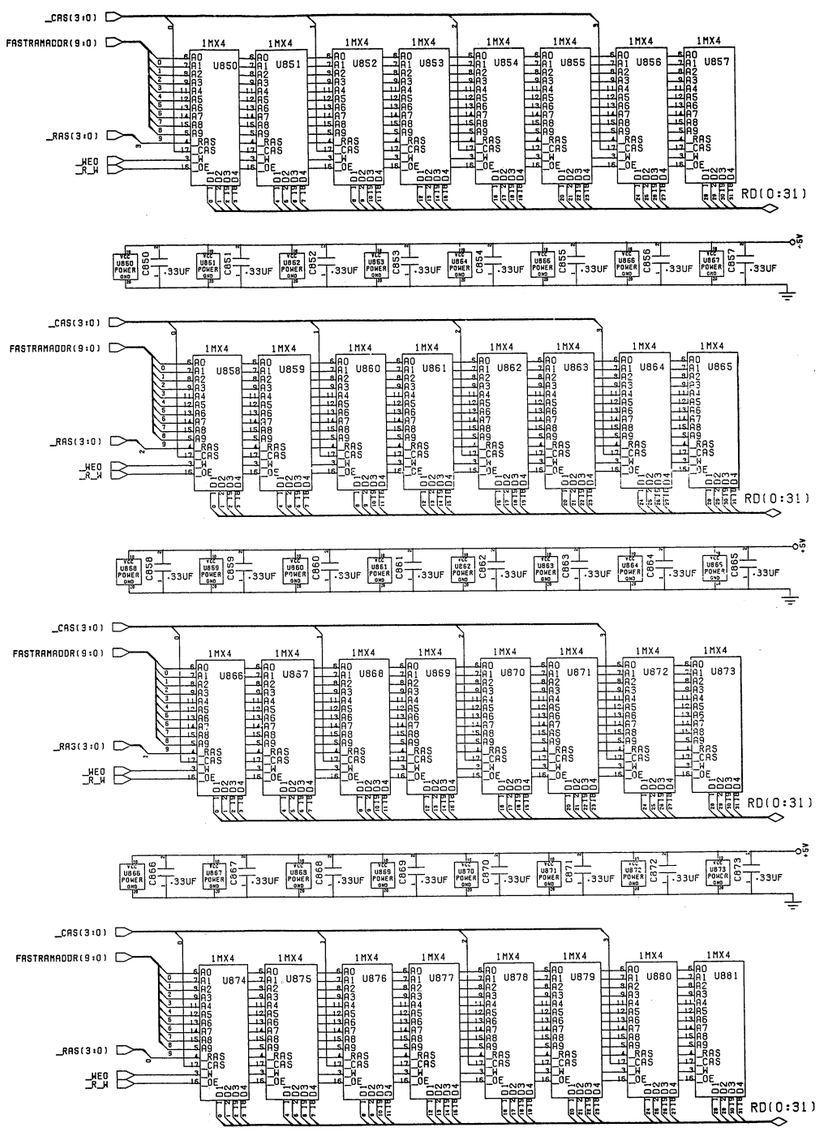
_CAS(3:0)
FASTRAMADDR(9:0)
_RAS(3:0)
_WEO
_R_W
RD(0:31)
1MX4
U850
U851
U852
U853
U854
U855
U856
U857
U858
U859
U860
U861
U862
U863
U864
U865
U866
U867
U868
U869
U870
U871
U872
U873
U874
U875
U876
U877
U878
U879
U880
U881
.33UF

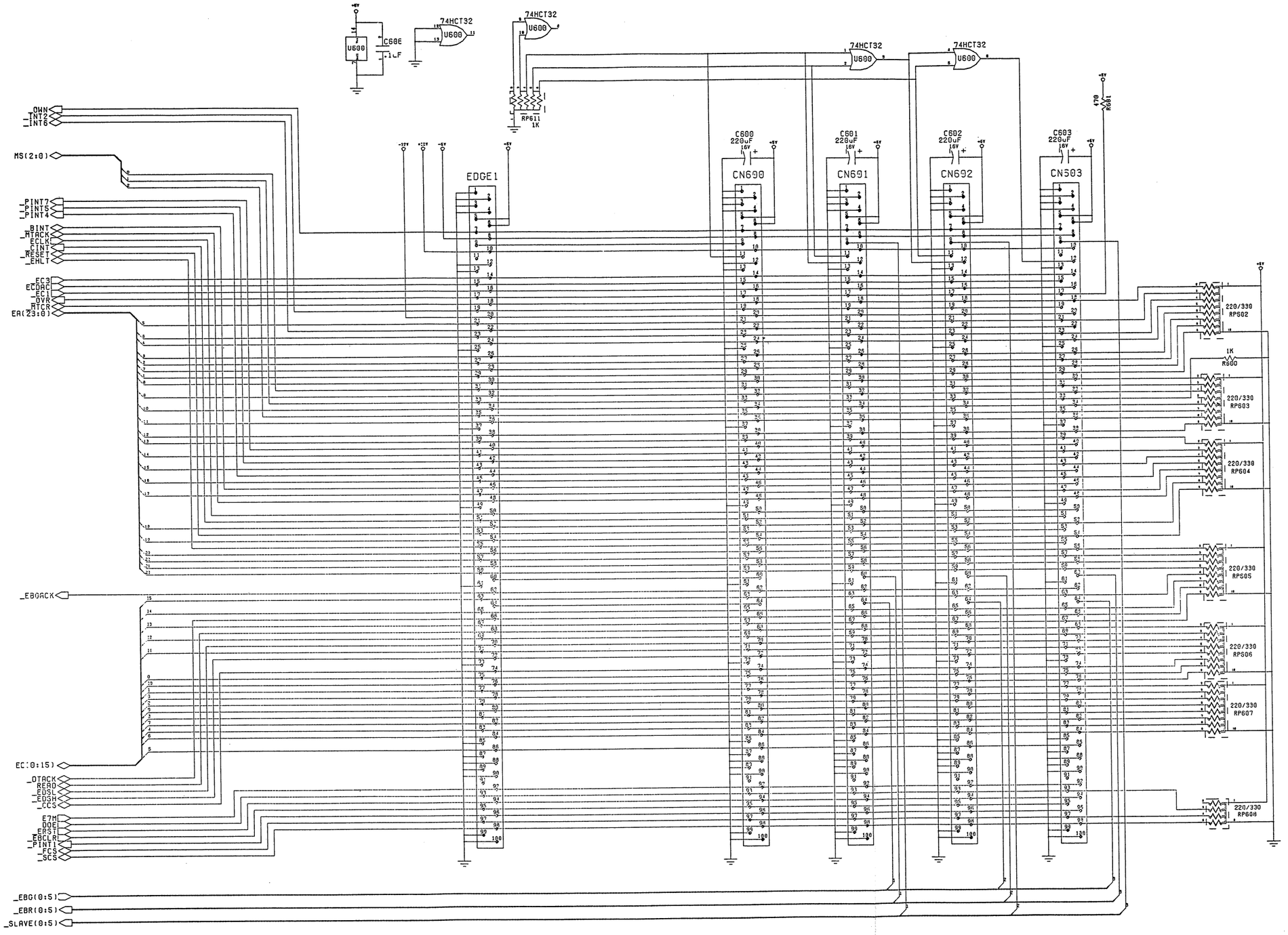
74HCT32
U600
C606
.1uF
RP611
1K
C600
C601
C602
C603
220uF
16V
CN600
CN601
CN602
CN603
EDGE1
R681
170
OWN
INT2
INT6
MS(2:0)
PINT7
PINT5
PINT4
BINT
MTACK
ECLK
CINT
RESET
EHLT
EC3
ECDRC
ECI
OVR
MTCR
EA(23:0)
EBGACK
EC(0:15)
DTACK
READ
EDSL
EDSH
CCS
EJM
DOE
ERST
EBCLR
PINT1
FCS
SCS
EBG(0:5)
EBR(0:5)
SLAVE(0:5)
220/330
RPS02
1K
RS00
220/330
RPS03
220/330
RPS04
220/330
RPS05
220/330
RPS06
220/330
RP607
220/330
RP608

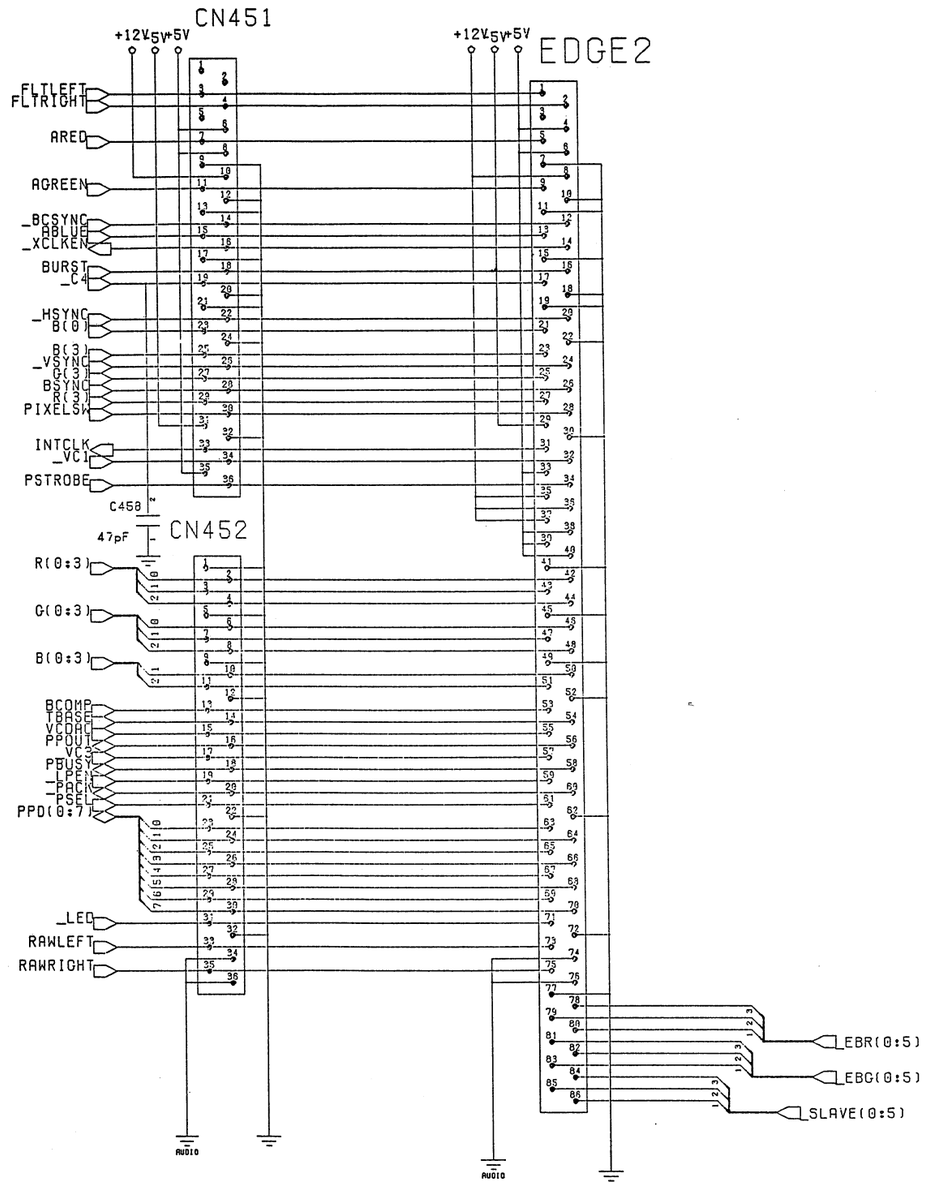
CN451
EDGE2
+12V
+5V
FLTLEFT
FLTRIGHT
ARED
AGREEN
_BCSYNC
ABLUE
_XCLKEN
BURST
_C4
_HSYNC
B(0)
B(3)
_VSYNC
G(3)
BSYNC
R(3)
PIXELSW
INTCLK
_VC1
PSTROBE
C450
47pF
CN452
R(0:3)
G(0:3)
B(0:3)
BCOMP
TBASE
VCOAT
PPOUT
VC3
PBUSY
_LPEN
_PACK
_PSEL
PPD(0:7)
_LED
RAWLEFT
RAWRIGHT
_EBR(0:5)
_EBG(0:5)
_SLAVE(0:5)
AUDIO

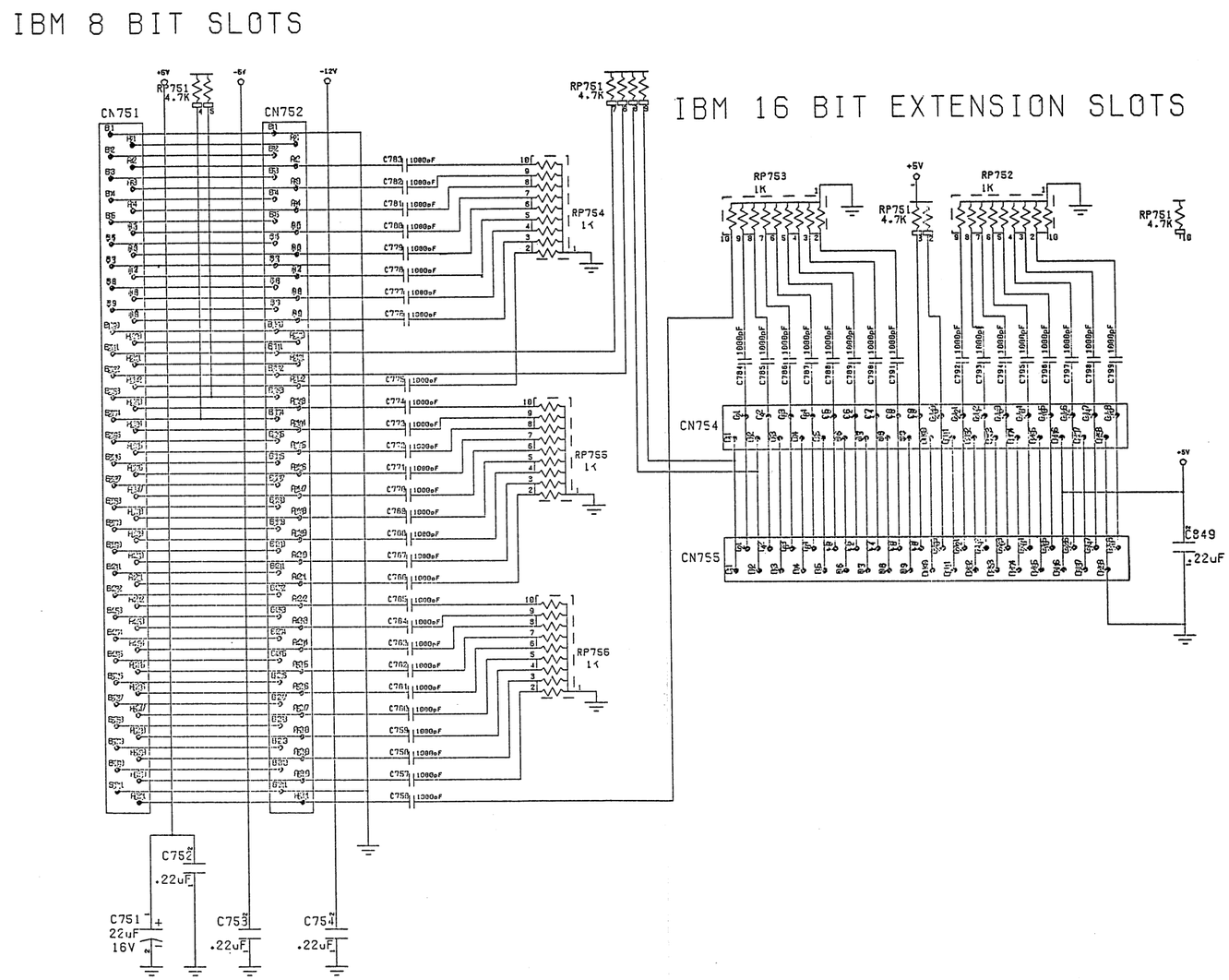
IBM 8 BIT SLOTS
IBM 16 BIT EXTENSION SLOTS
CN751
CN752
CN753
CN754
CN755
RP751
4.7K
RP752
1K
RP753
1K
RP754
1K
RP755
1K
RP756
1K
C751
22uF
16V
C752
.22uF
C753
.22uF
C754
.22uF
C849
22uF
+5V
-5V
-12V